Owner's Guide
and
Installation Instructions

Solar Premier Loline 596 270
Gas Boosted Water Heater

Install a Rheem

WARNING: Plumber – Be Aware

Use copper pipe ONLY. Plastic pipe MUST NOT be used.

It is a requirement of a solar water heater installation that all pipe work be in copper and not plastic, due to the effects of high water temperatures.

This water heater must be installed and serviced by a qualified person.
Please leave this guide with the householder.

WARNING: Plumber – Be Aware

- The solar hot and solar cold pipes between the solar storage tank and the solar collectors **MUST BE** of copper. All compression fittings must use brass or copper olives.
- The full length of the solar hot and solar cold pipes **MUST BE** insulated.

  The insulation must:

  - be of a closed cell type or equivalent, suitable for a solar water heating application and capable of withstanding the temperature of the closed circuit fluid generated by the solar collectors under stagnation conditions

    The specification of the chosen insulation material should be checked with the insulation manufacturer prior to installation as different materials may vary in temperature tolerance.
  - be at least 13 mm thick, however thicker insulation may be required to comply with the requirements of AS/NZS 3500.4
  - be weatherproof and UV resistant if exposed
  - extend through any penetrations in the eaves, ceiling and roof
  - cover valves and fittings in the solar pipe work
  - be fitted up to and cover the connections on both the solar storage tank and the solar collectors.

  The insulation will offer protection to a metal roof against corrosion due to water running off the copper pipes, assist in avoiding accidental contact with the solar pipe work as very high temperature closed circuit fluid can flow from the solar collectors to the solar storage tank, and also reduce pipe heat losses.

- The highest point of the solar hot and solar cold pipes must be where they connect to the solar collectors. There **MUST BE a continuous fall** of a minimum 5° (1 in 10 grade) in the pipe work from the solar collectors to the solar storage tank for efficient and complete drain back of the closed circuit fluid to occur.

  The system has NO WARRANTY for freeze damage if there is not a continuous fall in the solar hot and solar cold pipes, or they are not insulated in accordance with the installation instructions, or the closed circuit fluid has been incorrectly mixed.

- The insulated copper pipe work:

  - should be fixed at suitable locations to prevent or reduce the possibility of noise from water hammer and vibration from occurring
  - is not to be placed or installed in contact with plastic pipe work.

    Likewise, plastic pipe work is not to be placed or installed in contact with the insulated copper pipe work after the solar circuit is installed.

- Plastic pipe **MUST NOT** be used, as it will not withstand the temperature of the closed circuit fluid generated by the solar collectors under stagnation conditions. Extremely high closed circuit fluid temperatures up to 150°C for non-selective surface collectors and greater than 200°C for selective surface collectors can be generated under these conditions. Plastic pipe cannot withstand these temperatures and **MUST NOT** be used. Failure of plastic pipe can lead to the release of high temperature closed circuit fluid and cause severe water damage and flooding.

- The pressure applied to the solar circuit and solar collectors during a pressure test of a closed circuit system **MUST NOT** exceed 200 kPa, otherwise damage may result. Refer to "Pressure Testing" on page 33.

PATENTS

This water heater may be protected by one or more patents or registered designs in the name of Rheem Australia Pty Ltd or Paloma Co., Ltd.

Rheem Australia Pty Ltd is the supplier of the Rheem range of continuous flow gas water heaters, manufactured by Paloma Co., Ltd., a world leader in water heater technology and manufacture.

CONTENTS

HOUSEHOLDER – We recommend you read pages 4 to 18.

The other pages are intended for the installer but may be of interest.

ABOUT YOUR WATER HEATER

WATER HEATER APPLICATION

This water heater is designed for use in a single family domestic dwelling for the purpose of heating potable water. Its use in an application other than this may shorten its life.

MODEL TYPE

Your Rheem® Premier Loline solar water heater is designed for the solar collectors to be roof mounted and the solar storage tank to be installed at ground or floor level. The solar storage tank is suitable for outdoor installation only and with either S200 / SPA2000 or T200 / SCA2000 solar collectors. The system is suitable for installation in areas subject to frost or freeze conditions. Freeze conditions occur below 6°C.

SOLAR OPERATION

The Rheem Premier Loline solar water heater has its vitreous enamel lined solar storage tank installed at ground or floor level, remotely from the solar collectors. This water heater is a closed circuit solar hot water system with a heat exchanger in the solar storage tank.

The heat exchanger is filled with closed circuit fluid and is connected to the solar collectors by insulated copper pipe work forming a closed circuit. The closed circuit fluid is a solution of a blue, non-toxic food grade propylene glycol concentrate mixed with water. The closed circuit concentrate is used to lower the freezing temperature of the closed circuit fluid and provides protection against freezing.

As the sun heats the solar collectors, the increase in temperature activates the pump. The pump switches on whenever the solar collectors are hotter than the water in the tank and the water requires heating. The pump moves the closed circuit fluid from the solar storage tank heat exchanger through an insulated copper pipe to the solar collectors to be heated by the sun's energy and then back to the heat exchanger. Heat transfers from the closed circuit fluid in the heat exchanger to the water stored in the solar storage tank.

This process continues while solar energy is available and until the water in the solar storage tank reaches a temperature of approximately 75°C. The pump is then deactivated and the closed circuit fluid in the solar collectors and solar pipe work drains back into the heat exchanger in the solar storage tank.

The closed circuit provides protection to the solar collectors and solar circuit in harsh water areas. The drain back principle provides protection to the system in freezing conditions.

Automatic safety controls are fitted to the water heater to provide safe and efficient operation.

GAS BOOSTING OPERATION

Water stored in the solar storage tank passes through the gas booster when a hot tap is opened. The gas booster is for heating the water at times of low solar energy gain, such as during cloudy or rainy weather, or during colder months.

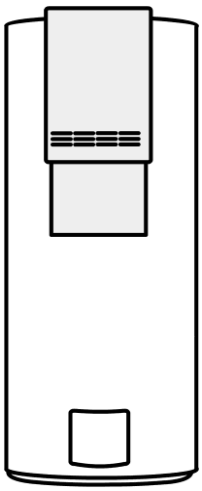

Solar heated water can reach temperatures up to 75°C in the solar storage tank. When the solar heated water temperature is 58°C and above, the gas booster will not boost the water temperature.

The gas booster operates automatically if heating of the water is required. When the solar heated water temperature is below 58°C, the gas burners ignite to provide immediate heating of the water to its preset outlet temperature setting. The heat produced by the burner is transferred to the water through the heat exchanger. The water is heated to a constant temperature by the automatic adjustment of the gas supply to the burner to suit the water flow rate. The gas burners extinguish when the hot tap is closed.

Automatic safety controls are fitted to the water heater to provide safe and efficient operation.

WATER OUTLET TEMPERATURE

This water heater has two outlets. One is a hot water outlet and the other is a tempered water outlet. The purpose of the hot water outlet is to deliver hot water at between 60°C and 75°C, usually for kitchen and laundry use. The purpose of the tempered water outlet is to deliver water up to 50°C, usually for bathroom or ensuite use.

The tempered water outlet is from the tempering valve, located under the pipe cover at the front of the water heater immediately below the gas booster. The tempering valve is the brass valve with a white plastic cap. The tempering valve mixes hot water from the solar storage tank and gas booster with cold water from the mains supply and delivers tempered water from its outlet.

The hot water outlet is located above the tempering valve. Depending upon how the water heater was installed, either both or only one of these outlets may have been plumbed to the hot water pipe work in the premises.

REDUCED HOT WATER FLOW WHEN HEAT EXCHANGER IS COLD

At a cold start-up, i.e. when the gas booster has not operated for some time (which is most often first thing in the morning), the initial flow of hot water may be reduced for a period of 5-10 seconds while the heat exchanger warms up. **This is both an energy and water saving feature of this water heater.** Once the heat exchanger has warmed up the hot water flow will increase and remain at normal flow levels. This feature will only occur at a cold start-up and not when the heat exchanger is already warm from a recent use of hot water.

HOW HOT SHOULD THE WATER BE?

The solar control unit will circulate the closed circuit fluid through the solar collectors until a temperature of approximately 75°C is reached in the solar storage tank. During periods of low solar energy gain, the gas booster will boost the water temperature automatically to its preset outlet temperature setting when required.

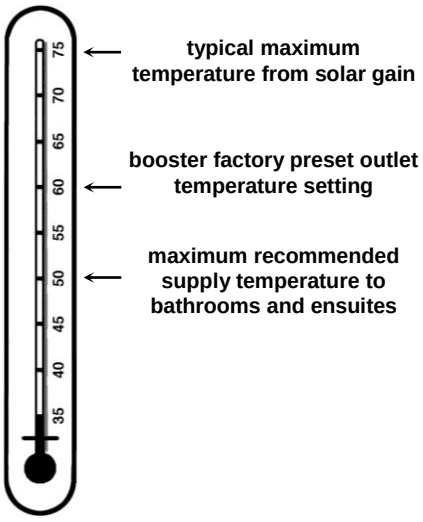

Note: The preset outlet booster temperature setting of the gas booster cannot be adjusted by the householder. The setting can only be adjusted by Rheem Service or their nearest Accredited Service Agent. The factory preset outlet temperature setting of the gas booster is 60°C.

Note: AS 3498 requires that a water heater provides the means to inhibit the growth of Legionella bacteria in potable water. This water heater has an in-series gas booster which can satisfy this AS 3498 requirement provided the gas booster is energised, the booster preset outlet temperature setting is 70°C or higher and a remote temperature controller is not used.

⚠ **Warning:** Temperature controllers **must not** be fitted to an in-series gas booster as part of a solar water heater system because water at a temperature much higher than the controller setting can be delivered.

HOTTER WATER INCREASES THE RISK OF SCALD INJURY

This water heater can deliver water at temperatures which can cause scalding. Check the water temperature before use, such as when entering a shower or filling a bath or basin, to ensure it is suitable for the application and will not cause scald injury.

We recommend and it may also be required by regulations that an approved temperature limiting device be fitted into the hot water pipe work to the bathroom and ensuite when this water heater is installed. This will keep the water temperature below 50°C at the bathroom and ensuite. The risk of scald injury will be reduced and still allow hotter water to the kitchen and laundry.

The tempered water outlet from this water heater will not deliver temperatures exceeding 50°C, in accordance with AS 4032.2 There is no statutory requirement to fit a supplementary temperature limiting device after this outlet if this water heater is installed in other than an early childhood centre, school, nursing home or a facility for young, aged, sick or disabled people.

⚠ WARNING

This water heater is only intended to be operated by persons who have the experience or the knowledge and the capabilities to do so. This water heater is not intended to be operated by persons with reduced physical, sensory or mental capabilities i.e. the infirm, or by children. Children should be supervised to ensure they do not interfere with the water heater.

This water heater uses 240 V AC electrical power for operation of the control systems and the electrically operated components. The removal of the front covers will expose 240 V wiring. They must only be removed by a qualified person. The power lead from the water heater must be plugged into a weatherproof electrical outlet. Take care not to touch the power plug with wet hands.

Do not touch any exposed pipe work or fittings connecting the solar storage tank and the solar collectors, as this may result in a burn injury. Very high temperature closed circuit fluid can be generated by the solar collectors under certain conditions and this flows through the pipe work from the solar collectors to the solar storage tank.

Note: Any exposed pipe work or fittings in the collector circuit should be attended to and covered with insulation. Phone Rheem Service or their nearest Accredited Service Agent to arrange for an inspection.

Should the water from the water heater appear blue or if blue closed circuit fluid is noticed around the base of the water heater, this indicates a leak of the closed circuit fluid from the heat exchanger. The closed circuit fluid is non-toxic and not hazardous to health. Phone Rheem Service or their nearest Accredited Service Agent to arrange for an inspection.

SAFETY

This water heater is supplied with temperature sensors, a FlameSafe™ protection system, pressure relief valves and a combination temperature pressure relief valve. These devices must not be tampered with or removed. The water heater must not be operated unless each of these devices is fitted and is in working order.

If the power supply cord or plug to the solar storage tank is damaged, it must be replaced by a qualified person in order to avoid a hazard. The power supply cord and plug must be replaced with a genuine replacement part available from Rheem. Phone Rheem Service or their nearest Accredited Service Agent to arrange for an inspection.

⚠ **Warning:** For continued safety of this water heater it must be installed, operated and maintained in accordance with the Owner's Guide and Installation Instructions.

The Rheem warranty may not cover faults if relief valves or other safety devices are tampered with or if the installation is not in accordance with these instructions.

- Do not store **flammable or combustible materials** near the gas booster. Flammable liquids (such as petrol), newspapers and similar articles must be kept well away from the gas booster and the flue terminal.
- Do not use **aerosols, stain removers and household chemicals** near the gas booster whilst it is working. Gases from some aerosol sprays, stain removers and household chemicals become corrosive when drawn into a flame.
- Do not store swimming pool chemicals, household cleaners, etc., near the gas booster.
- Do not place anything on top of the gas booster or in contact with the flue terminal. Ensure the flue terminal is not obstructed in any way at any time.
- Do not use Propane / Butane gas mixtures in a Propane model. A Propane model is designed to operate on Propane only. The use of Propane / Butane mixture, such as automotive LPG fuel, in a Propane model is unsafe and can cause damage to the gas booster.

MAINS PRESSURE

The water heater is designed to operate at mains pressure by connecting directly to the mains water supply. If the mains supply pressure in your area exceeds that shown on page 21, a pressure limiting valve must be fitted. The supply pressure should be greater than 350 kPa for true mains pressure operation to be achieved. The supply pressure should be greater than 140 kPa for the rated flow and performance of the gas booster to be achieved.

SOLAR MONITOR

The solar storage tank incorporates a solar monitor. The solar monitor is located on the lower front cover and houses both a green and a red LED.

The green LED, marked “Solar”, indicates the current operational mode of the solar water heater and the red LED, marked “Attention”, indicates a fault mode.

The green LED will emit either a constant glow or a series of flashes, with a 2 second interval between each series.

The red LED will emit a series of flashes, with a 2 second interval between each series, only if there is a particular fault condition with the system.

The operational modes are:

Flashes	Operational Modes
solid green (remains on)	Standby mode
2 x green	Flooding solar circuit
3 x green	Pump flow control
4 x green	Pump flow established
5 x green	Tank at maximum temperature
no green (remains off)	Call for service

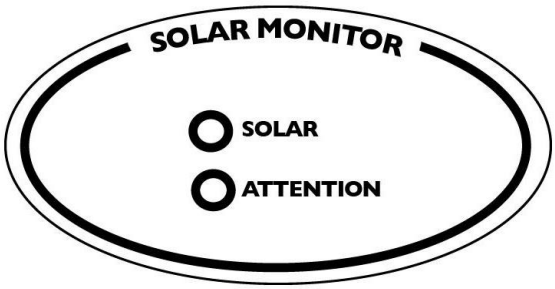

If the power supply to the water heater is on and the green LED is off or the red LED is flashing, this indicates there is a fault with the water heater. The red LED may emit up to six flashes in each series of flashes. Count the number of flashes and phone Rheem Service or their nearest Accredited Service Agent to arrange for an inspection.

RAINWATER COLLECTION SYSTEM

If the solar collectors and solar pipe work are installed on a section of roof which is part of a rainwater runoff collection system, then it is recommended this section of roof and its gutter be isolated from the rainwater collection system.

The closed circuit fluid acts as an anti-freeze agent and rust inhibitor, is non-toxic to humans and is harmless to the environment. However it does have an adverse effect on water stored in rainwater tanks. It will kill microscopic algae typically present in rainwater tanks and cause an unpleasant odour to develop. This will result in the rainwater tank having to be drained and cleaned.

If a rainwater tank does become contaminated with closed circuit fluid, then the following actions should be undertaken by a qualified person. Additional actions may be necessary to return the water supply to a consumable state.

- Correct the leak or spillage.
- Wash down the roof area where the spill or leak has occurred.
- Flush out the gutters and down pipes.
- Determine how the closed circuit fluid made its way into the rainwater tank. If the section of roof supporting the solar water heater is not isolated from the rainwater collection system, then this should be remedied.
- Empty the rainwater tank, and clean out all algae from the inside of the tank.
- Refill the rainwater tank with fresh water.

Refer to “Rainwater Collection System” on page 22 for additional information.

FREEZE PROTECTION

The water heater has a freeze protection system. The water heater, including the in-series gas booster, is not suitable for installation in areas where the ambient temperature falls below -20°C (including wind chill factor). Refer to "Freeze Protection" on page 22 for further information.

PRECAUTIONS

Where damage to property can occur in the event of the water heater leaking, the water heater must be installed in a safe tray. Construction, installation and draining of a safe tray must comply with AS/NZS 3500.4 and all local codes and regulatory authority requirements.

The water heater must be maintained in accordance with the Owner's Guide and Installation Instructions. Refer to "Regular Care" on page 10 and to "Anode Inspection and Replacement" on page 13.

If this water heater is to be used where an uninterrupted hot water supply is necessary for your application or business you should ensure that you have back-up redundancy within the hot water system design. This should ensure the continuity of hot water supply in the event that this water heater were to become inoperable for any reason. We recommend you seek advice from your plumber or specifier about your needs and building back-up redundancy into your hot water supply system.

TO TURN OFF THE WATER HEATER

If you plan to be away from home for a few nights, we suggest you leave the water heater switched on.

If it is necessary to turn off the water heater:

- Switch off the electrical supply at the power outlets to the solar storage tank and gas booster if there is no risk of freezing conditions occurring (refer to note below).
- Close the gas isolation valve at the inlet to the water heater.
- Close the cold water isolation valve at the inlet to the water heater.

Notes:

- The in-series gas booster frost protection system will be rendered inoperable if electrical power is not available at the gas booster. Damage caused by freezing due to the unavailability of power at the in-series gas booster is not covered by the Rheem warranty (refer to "Terms of the Rheem Warranty" on page 63).
- If it is necessary to switch the power off to the in-series gas booster and there is a risk of freezing, then it is necessary to drain the gas booster (refer to "Draining the Gas Booster Water Heater" on page 9).

TO TURN ON THE WATER HEATER

- Screw in the drain plugs at the cold water inlet and hot water outlet of the gas booster if the gas booster has been drained.
- Open the cold water isolation valve fully at the inlet to the water heater.
- Open all of the hot water taps in the house (don't forget the shower).

  Air will be forced out of the taps.
- Close each tap as water flows freely from it.
- Open the gas isolation valve fully at the inlet to the water heater.
- Plug in the solar storage tank and gas booster at their power outlets and switch on the electrical supply.

  The power outlets must be switched on for the solar controls to operate and solar gain to be achieved and for the gas booster to operate.

The gas booster will operate automatically when you open a hot tap, if boosting is required.

GOING ON HOLIDAYS

It is not necessary to switch off the electrical supply at the power outlet to the water heater if you are going away. However, if it is necessary to switch off the power to the water heater, refer to "To Turn Off The Water Heater" on page 8. If the power to the water heater is switched off and there is a risk of freezing, then it is necessary to drain the gas booster (refer to "Draining the Gas Booster Water Heater" on page 9).

DRAINING THE GAS BOOSTER WATER HEATER

- Turn off the water heater (refer to "Turn Off The Water Heater" on page 8).
- Open a hot tap (preferably the shower outlet).
- Unscrew the two drain plugs, one each at the cold water inlet and hot water outlet, on the underside of the gas booster.

  Water will drain from the gas booster.
- When water stops flowing from the gas booster, close the hot tap.

Note: It is recommended not to screw the drain plugs back in, until the water heater is to be turned on again.

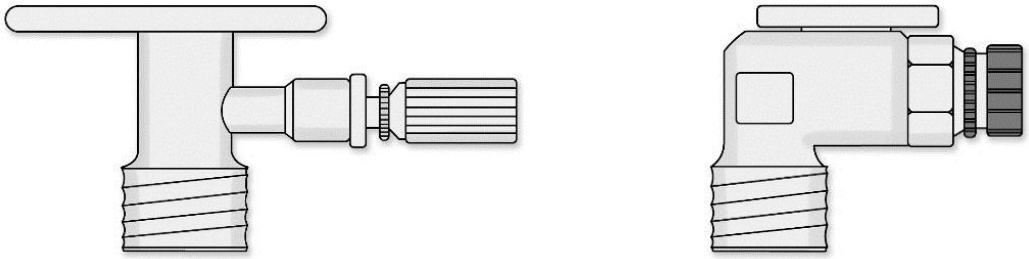

HOW DO I KNOW IF THE WATER HEATER IS INSTALLED CORRECTLY?

Installation requirements are shown on pages 19 to 27. The water heater must be installed:

- by a qualified person, and
- in accordance with the installation instructions, and
- in compliance with Standards AS/NZS 3500.4, AS/NZS 3000, AS 5601 or AS/NZS 5601.1, as applicable under local regulations, and all local codes and regulatory authority requirements.

In New Zealand, the installation must also conform to Clause G12 of the New Zealand Building Code.

⚠ **Warning:** Temperature controllers **must not** be fitted to an in-series gas booster as part of a solar water heater system because water at a temperature much higher than the controller setting can be delivered.

VICTORIAN CUSTOMERS

Notice to Victorian Customers from the Victorian Plumbing Industry Commission. This water heater must be installed by a licensed person as required by the Victorian Building Act 1993.

Only a licensed person will give you a Compliance Certificate, showing that the work complies with all the relevant Standards. Only a licensed person will have insurance protecting their workmanship for 6 years. Make sure you use a licensed person to install this water heater and ask for your Compliance Certificate.

DOES THE WATER CHEMISTRY AFFECT THE WATER HEATER?

The water heater is suitable for most public water supplies, however some water chemistries may have detrimental effects on the water heater, components and fittings. Refer to "Water Supplies" on page 12.

If you are in a known harsh water area or you are not sure of your water chemistry, have your water checked against the conditions described on pages 12 to 14.

HOW LONG WILL THE WATER HEATER LAST?

The water heater is supported by a manufacturer's warranty (refer to page 63). There are a number of factors that will affect the length of service the water heater will provide. These include but are not limited to the water chemistry, the water pressure, the water temperature (inlet and outlet) and the water usage pattern. Refer to "Precautions" on page 8.

REGULAR CARE

MINOR SIX MONTH MAINTENANCE

It is recommended minor maintenance be performed every six months by the dwelling occupant.

The minor maintenance includes:

- Operate the easing lever on the temperature pressure relief valve. It is very important you raise and lower the lever gently. Refer to "Temperature Pressure Relief Valve" on page 11.

  ⚠ **Warning:** Exercise care to avoid any splashing of water, as water discharged from the drain line will be hot. Stand clear of the drain line's point of discharge when operating the valve's lever.

- Operate the easing lever on the expansion control valve (if fitted). It is very important you raise and lower the lever gently. Refer to "Expansion Control Valve" on page 11.

- Check the drain line from the safe tray (if one is installed) is not blocked.

It is also recommended minor maintenance to be performed every six months on the gas booster by the dwelling occupant. Refer to the Owner's Guide and Installation Instructions supplied with the gas booster for information regarding the recommended six month maintenance.

MAJOR FIVE YEAR SERVICE

It is recommended a major five year service be conducted on the water heater.

⚠ **Warning**: Servicing of a water heater must only be carried out by a qualified person. Phone Rheem Service or their nearest Accredited Service Agent.

Note: The five year service and routine replacement of any components, such as the anodes and relief valves, are not included in the Rheem warranty. A charge will be made for this work. Only genuine replacement parts should be used on this water heater.

The major service includes the following actions:

- Replace the temperature pressure relief valve.
- Inspect and flush the expansion control valve (if fitted). If required, replace the valve.
- Inspect and if required, replace the anodes.

  If an anode is not replaced, it should be replaced within three years of this service (refer to "Anode Inspection and Replacement" on page 13).

- Check the system for correct operation.
- Check the closed circuit fluid level.
- Clean the collector glass.
- Visually check the unit for any potential problems.
- Inspect all connections.
- Check the drain line from the safe tray (if one is installed) is not blocked.

Note: The solar storage tank may need to be drained during this service. After the completion of the service, the solar storage tank will take some time to reheat the water by solar gain.

It is also recommended a five year service be conducted on the gas booster. Refer to the Owner's Guide and Installation Instructions supplied with the gas booster for information regarding the recommended five year service.

TEMPERATURE PRESSURE RELIEF VALVE

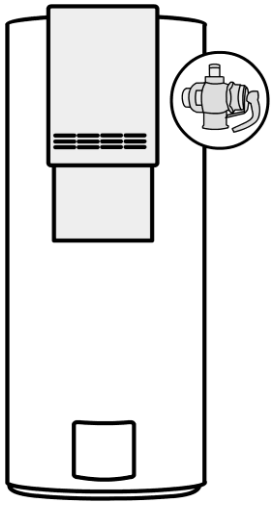

This valve is near the top of the water heater and is essential for its safe operation. It is possible for the valve to release a little water through the drain line during each heating period. This occurs as the water is heated and expands by approximately 1/50 of its volume.

Continuous leakage of water from the valve and its drain line may indicate a problem with the water heater (refer to "Temperature Pressure Relief Valve Running" on page 17).

⚠ **Warning:** Never block the outlet of this valve or its drain line for any reason.

Operate the easing lever on the temperature pressure relief valve once every six months. Refer to "Minor Six Month Maintenance" on page 10. **It is very important the lever is raised and lowered gently.**

⚠ **Warning:** Failure to do this may result in the water heater cylinder failing.

⚠ **Warning:** Exercise care to avoid any splashing of water, as water discharged from the drain line will be hot. Stand clear of the drain line's point of discharge when operating the valve's lever.

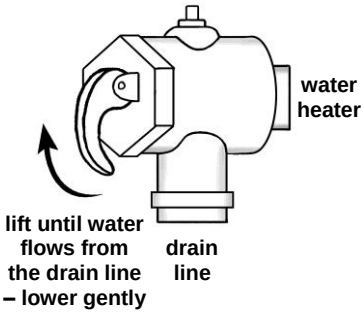

If water does not flow freely from the drain line when the lever is lifted, then the water heater must be checked. Phone Rheem Service or their nearest Accredited Service Agent to arrange for an inspection.

The temperature pressure relief valve should be replaced at intervals not exceeding 5 years, or more frequently in areas where there is a high incidence of water deposits (refer to "Water Supplies" on page 12).

EXPANSION CONTROL VALVE

In many areas, including South Australia, Western Australia and scaling water areas, it is mandatory an expansion control valve is fitted to the cold water line to the water heater. The expansion control valve may discharge a small quantity of water from its drain line during the heating period instead of the temperature pressure relief valve on the water heater.

The easing lever on the expansion control valve should be operated once every six months. Refer to "Minor Six Month Maintenance" on page 10. **It is very important the lever is raised and lowered gently.** If water does not flow freely from the drain line when the lever is lifted, then the water heater should be checked by Rheem Service or their nearest Accredited Service Agent. The expansion control valve should be checked for performance or replaced at intervals not exceeding 5 years, or more frequently in areas where there is a high incidence of water deposits.

COLLECTOR GLASS

Ensure the glass on your solar collectors is free of dust, salt spray or any other matter, which may reduce the effectiveness of the solar collectors. If the collector glass becomes dirty, hose down or if the solar collectors are accessible, wash the collector glass with water and a soft brush when the solar collectors are cool.

Have any trees trimmed which may shade the solar collectors.

Rheem solar collectors have passed the AS/NZS 2712 requirements for resistance to hailstone damage, so it is not normally necessary to fit a guard to a collector. Stone Guards are available to provide a level of protection to the collectors against vandalism or accidental damage. Contact Rheem or your local Rheem Solar Water Heater Distributor for details.

GENERAL MAINTENANCE

The jacket of the water heater can be cleaned with a soft cloth and warm mild soapy water. Under no circumstances should abrasive materials or powders be used. On a regular basis, inspect around the water heater for insect infestations, such as ants. Insects may look for a warm place to nest, particularly in wet weather. Insects encroaching into or nesting in the water heater can interfere with the operation of the water heater and also damage components. Spray insecticide around the water heater if necessary to rid the area of insects.

WATER SUPPLIES

This water heater must be installed in accordance with this advice to be covered by the Rheem warranty.

This water heater is manufactured to suit the water conditions of most public reticulated water supplies. However, there are some known water chemistries which can have detrimental effects on the water heater and its operation and / or life expectancy. If you are unsure of your water chemistry, you may be able to obtain information from your local water supply authority. This water heater should only be connected to a water supply which complies with these guidelines for the Rheem warranty to apply.

CHANGE OF WATER SUPPLY

The changing or alternating from one water supply to another can have a detrimental effect on the operation and / or life expectation of a water heater cylinder, a temperature pressure relief valve and a gas booster's copper heat exchanger.

Where there is a changeover from one water supply to another, e.g. a rainwater tank supply, bore water supply, desalinated water supply, public reticulated water supply or water brought in from another supply, then water chemistry information should be sought from the supplier or it should be tested to ensure the water supply meets the requirements given in these guidelines for the Rheem warranty to apply.

ANODE

The vitreous enamel lined cylinder of the water heater is only covered by the Rheem warranty when the total dissolved solids (TDS) content in the water is less than 2500 mg/L and when the correct colour coded anode is used. If an incorrect colour coded anode is used in the water heater, any resultant faults will not be covered by the Rheem warranty. In addition, the use of an incorrect colour coded anode may shorten the life of the water heater cylinder.

The correct colour coded anode must be selected and fitted to the water heater in accordance with the following advice and the Anode Selection chart on page 12 for the Rheem warranty to apply to the water heater cylinder.

Total Dissolved Solids	Anode colour code
0 – 40 mg/L	Green
40 – 150 mg/L	Green or Black
150 – 400 mg/L	Black
400 – 600 mg/L	Black or Blue
600 – 2500 mg/L	Blue
2500 mg/L +	Blue (no cylinder warranty)

The changing of an anode must be carried out by a qualified person.

Note: Some water analysis reports may state the conductivity of the water rather than the level of total dissolved solids. Conductivity, measured in microsiemens per centimetre (μS / cm), is directly proportional to the TDS content of the water. TDS, in mg / L, is approximately 70% of the conductivity in μS / cm.

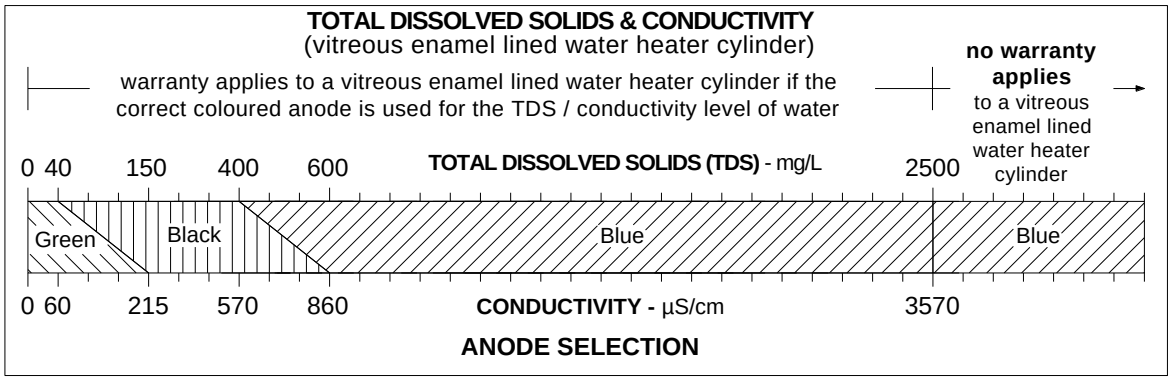

ANODE INSPECTION AND REPLACEMENT

The anodes installed in a vitreous enamel lined steel water heater cylinder will slowly dissipate whilst protecting the cylinder. The life of the cylinder may be extended by replacing the anodes.

If the anodes are not replaced during a five year service (refer to "Major Five Year Service" on page 10) then the maximum time after installation when the anodes should be replaced for this water heater is 8 years.

For water supplies which are either softened or desalinated, or where the water supply may alternate between a water tank and a reticulated public supply or another supply, it is recommended the anodes be replaced within 5 years of installation.

CAUTION

If the water supply has a TDS greater than 150 mg/L and a green anode has not been changed to a black anode, or if the TDS is greater than 600 mg/L and an anode has not been changed to a blue anode, there is the possibility the anode may become overactive and hydrogen gas could accumulate in the top of the water heater during long periods of no use.

If, under these conditions, the water heater has not been used for two or more weeks the following procedure should be carried out before using any electrical appliances (automatic washing machines and dishwashers) which are connected to the hot water supply.

The hydrogen, which is highly flammable, should be vented safely by opening a hot tap and allowing the water to flow. There should be no smoking or naked flame near the tap whilst it is turned on. Any hydrogen gas will be dissipated. This is indicated by an unusual spurting of the water from the tap. Once the water runs freely, any hydrogen in the system will have been released.

SATURATION INDEX

The saturation index is used as a measure of the water's corrosive or scaling properties.

In a corrosive water supply, the water can attack copper parts and cause them to fail.

Where the saturation index is less than –1.0, the water is very corrosive and the Rheem warranty does not apply to a copper heat exchanger in a continuous flow water heater.

In a scaling water supply calcium carbonate is deposited out of the water onto any hot metallic surface.

Where the saturation index exceeds +0.40, the water is very scaling. An expansion control valve must be fitted on the cold water line after the non-return valve to protect and for the Rheem warranty to apply to the temperature pressure relief valve and water heater cylinder.

Where the saturation index exceeds +0.80, the Rheem warranty does not apply to a copper heat exchanger in a continuous flow gas booster water heater.

Water which is scaling may be treated with a water softening device to reduce the saturation index of the water.

Refer to the Saturation Index chart on page 14.

Refer to the cold water connection detail on page 37 for the position of the expansion control valve.

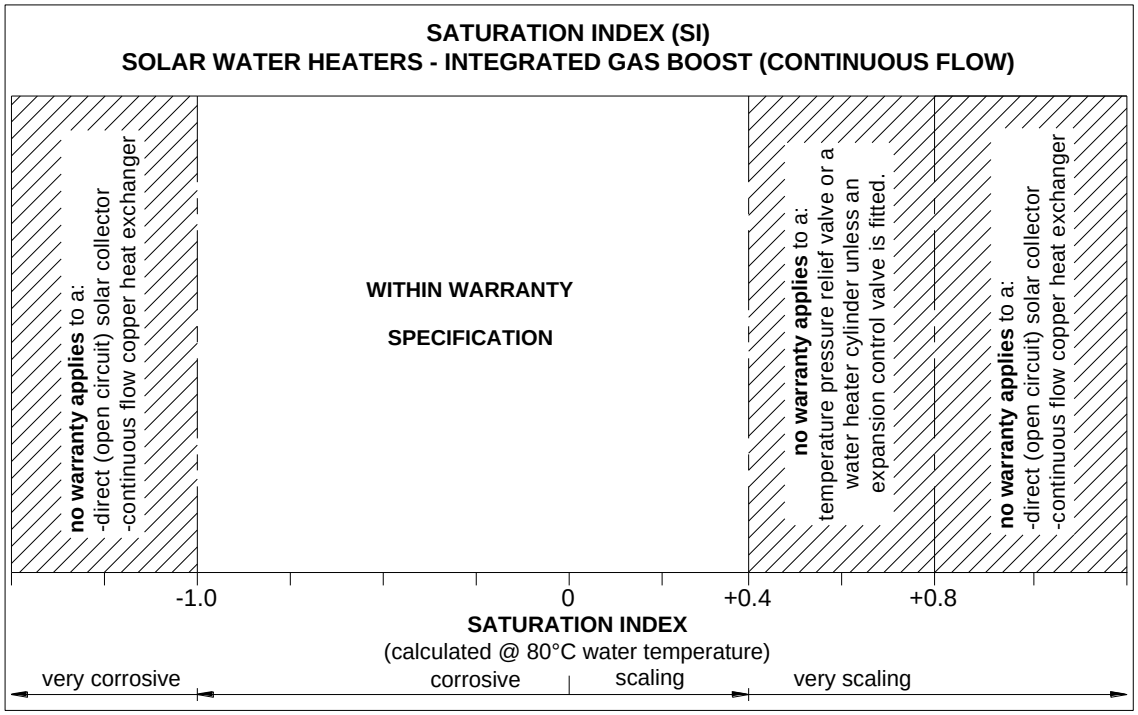

SUMMARY OF WATER CHEMISTRY ADVICE AFFECTING WARRANTY

The water heater, solar collectors and their components are not suitable for certain water chemistries. Those chemistries are listed below. If the water heater is connected at any time to a water supply with the following water chemistry, the Rheem warranty will not cover any resultant faults on the components listed below:

Water Chemistry	Component
Total Dissolved Solids (TDS) > 2500 mg/L	water heater cylinder
Total Dissolved Solids (TDS) not suitable for anode type	water heater cylinder
Saturation Index (SI) < -1.0	gas booster copper heat exchanger
Saturation Index (SI) > +0.4 (if an expansion control valve is not fitted)	temperature pressure relief valve, water heater cylinder
Saturation Index (SI) > +0.8	gas booster copper heat exchanger

SAVE A SERVICE CALL

Check the items below before making a service call. You will be charged for attending to any condition or fault that is not related to manufacture or failure of a part.

COLD WATER FROM THE HOT TAP

- Close the hot tap, wait 10 seconds and open the hot tap again.
- Is the hot tap open enough?

  The gas booster burners will not light if the flow rate is less than 2.0 L / min.
- **Solar control unit and gas booster not operating**
  - Check the power supply cord is plugged in and the power outlet switched on.
  - Is power available in the house?

    Try using another electrical appliance.
- **Gas supply**
  - Is the isolation valve in the gas line open?
  - Is there a gas supply to the rest of the house?

    Try lighting another gas appliance.
  - Has the gas line been purged of air after installation?

    Refer to your plumber.

REDUCED HOT WATER FLOW WHEN HEAT EXCHANGER IS COLD

At a cold start-up, i.e. when the gas booster has not operated for some time (which is most often first thing in the morning), the initial flow of hot water may be reduced for a period of 5-10 seconds while the heat exchanger warms up. **This is both an energy and water saving feature of this water heater.** Once the heat exchanger has warmed up the hot water flow will increase and remain at normal flow levels. This feature will only occur at a cold start-up and not when the heat exchanger is already warm from a recent use of hot water.

NO WATER FROM THE HOT TAP

No flow of water from the hot tap may indicate a restriction in or failure of the cold water supply to the water heater. Check for water flow at other taps and that the cold water isolation valve (refer to page 37) is fully open.

WATER FLOW FLUCTUATES

More than two or three hot taps in use at the same time may cause a decrease in the hot water flow from the taps.

- Is there more than two or three hot taps open, or are appliances such as a dishwasher or washing machine, in use at the same time?

  Ensure only two or three hot taps (or appliance) are on at the one time.
- Check the flow of the water from one tap, e.g., the shower.

  The shower should be adjusted so the hot tap is fully open.

GAS BOOSTER OPERATING TOO FREQUENTLY

You may find that the gas booster operates more frequently than expected. This will occur when the solar heated water temperature is lower than 58°C, which may be experienced during periods of low solar energy gain or if there has been heavy hot water usage. Factors to consider are:

- **Hot tap not used recently**
  If a hot tap has not been used for a while, the water in the pipe work between the solar water heater and the gas booster may have cooled down. The water heater will sense the cooler water and this will cause the burners on the water heater to ignite and boost the water temperature when a hot tap is first turned on. The burners will extinguish when solar heated water of 58°C or higher from the solar storage tank reaches the gas booster (refer also to "Fan Continues to Run after Water Heater Operation Stops" on page 16).

- **Insufficient sunlight**
  Insufficient sunlight due to cloudy weather during hotter months or low solar energy contribution in colder months may mean the gas booster operates more often.

- **Collectors shaded**
  If trees or other objects shade the solar collectors or if the glass is dirty, the effectiveness of the solar collectors will be greatly reduced. Have the trees trimmed or the solar collectors relocated if the obstruction is permanent or clean the collector glass (refer to "Collector Glass" on page 11).

- **Collector area is too small**
  For most installations, the number of solar collectors recommended in Rheem literature has been proven to provide the required solar energy to meet the average family needs. However, in some circumstances, it may be necessary to install an additional solar collector.

- **Are you using more hot water than you think?**
  Is one outlet (especially the shower) using more hot water than you think?

  Very often it is not realised the amount of hot water used, particularly when showering. Carefully review the family's hot water usage. As you have installed an energy saving appliance, energy saving should also be practised in the home. Adjust your water usage pattern to take advantage of maximum solar gains.

  Have your plumber install a flow control valve to each shower outlet, basin and sink to reduce water usage.

- **Temperature pressure relief valve running**
  Is the relief valve discharging too much water? (Refer to "Temperature Pressure Relief Valve Running" on page 17).

- **Water heater size**
  Do you have the correct size water heater for your requirements? The sizing guide in the sales literature and on the Rheem website (www.rheem.com.au) suggests average sizes that may be needed.

- **Green LED is off or red LED is flashing on Solar Monitor**
  If the green LED is off or the red LED is flashing on the Solar Monitor label, there may be a problem with the solar water heater operation and solar gain is not being achieved. This will result in the gas booster operating to provide all of the hot water required.

  Switch off the electrical supply at the power outlet to the solar storage tank for a few seconds, then switch on again.

  If the green LED remains off or the red LED recommences to flash, then count the number of flashes and phone Rheem Service or their nearest Accredited Service Agent to arrange for an inspection.

FAN CONTINUES TO RUN AFTER WATER HEATER OPERATION STOPS

It is the normal operation of the gas booster for the fan to continue running after heating of the water is finished. The fan may run for up to six minutes after the burners extinguish, to prepare for the next ignition.

TEMPERATURE PRESSURE RELIEF VALVE RUNNING

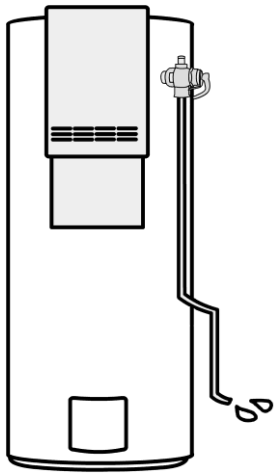

- **Normal Operation**
  It is normal and desirable this valve allows a small quantity of water to escape during the heating cycle. However, if it discharges more than a bucket full of water in 24 hours, there may be another problem.

- **Continuous dribble**
  Try gently raising the easing lever on the relief valve for a few seconds (refer to "Temperature Pressure Relief Valve" on page 11). This may dislodge a small particle of foreign matter and clear the fault. Release the lever gently.

- **Steady flows for long period (often at night)**
  This may indicate the mains water pressure sometimes rises above the designed pressure of the water heater. Ask your installing plumber to fit a pressure limiting valve.

  ⚠ **Warning:** Never replace the relief valve with one of a higher pressure rating.

- **Heavy flows of hot water until the water heater is cold - then stops until water reheats**
  The water heater **must** be switched off at the isolating switch or switchboard. Phone Rheem Service or their nearest Accredited Service Agent to arrange for an inspection.

EXPANSION CONTROL VALVE RUNNING

If an expansion control valve is fitted in the cold water line to the water heater (refer to page 37) it may discharge a small quantity of water instead of the temperature pressure relief valve on the water heater. The benefit is that energy is conserved as the discharged water is cooler.

PRESSURE RELIEF VALVE DISCHARGING

A pressure relief valve is incorporated into the gas booster controls. This valve protects the gas booster, by allowing water to escape, in the event of excessive pressure build up in the waterways.

- **Normal operation**
  A small volume of water may discharge from the bottom of the gas booster when a hot tap is suddenly closed.

- **Continuous dribble**
  A continuous dribble may indicate the water supply pressure is above the design pressure for the gas booster. If so, a pressure limiting valve must be installed on the cold water supply pipe to the water heater (refer to "Mains Water Supply" on page 21).

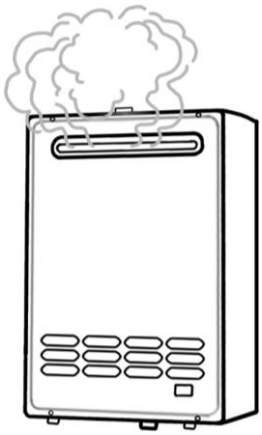

CLOUDS OF WHITE 'VAPOUR' FROM THE FLUE TERMINAL

During the heating cycle, it is not unusual to see water vapour clouds steaming from the flue terminal, particularly on cold days. This is normal operation of the gas booster.

ERROR CODE

The water heater provides a diagnostic error code in the event of an interruption to its operation. The error code is displayed on the front of the water heater on the OK MONITOR as a numerical value. If an error code appears:

- Close the hot tap and switch off the electrical supply to the water heater.

- Wait 5 minutes, then switch on the electrical supply to the water heater and open a hot tap.

If the error code persists, take note of the numerical code and turn off the hot tap. Phone Rheem Service or their nearest Accredited Service Agent to arrange for inspection.

HIGHER THAN EXPECTED GAS BILLS

With the installation of your new solar hot water system, maximum gas energy savings can be achieved with careful planning of hot water usage. Should you at any time, feel your gas bill is higher than expected, we suggest you check the following points:

- Is the relief valve running excessively?

  Refer to "Temperature Pressure Relief Valve Running" on page 17.

- Is one outlet (especially the shower) using more hot water than you think?

  Refer to "Gas Booster Operating Too Frequently" on page 16.

- Is there a leaking hot water pipe, dripping hot water tap, etc?

  Even a small leak will waste a surprising quantity of hot water and energy. Replace faulty tap washers, and have your plumber rectify any leaking pipe work.

- Is the gas booster operating too frequently?

  Refer to "Gas Booster Operating Too Frequently" on page 16.

- Has there been an increase in hot water usage?

  An increase in hot water usage may result in an increase in booster operation.

- Has your water heating tariff rate been increased by your gas retailer since your previous bill?

COLLECTOR GLASS

The Rheem warranty **DOES NOT** cover breakage of solar collector glass. Check your household insurance policy covers collector glass breakage.

⚠ **Warning:** No attempt should be made to remove or replace broken collector glass.

The collector glass is not offered as a replacement part. Should a solar collector require replacement, contact Rheem Service or their nearest Accredited Service Agent.

IF YOU HAVE CHECKED ALL THE FOREGOING AND STILL BELIEVE YOU NEED ASSISTANCE, PHONE RHEEM SERVICE OR THEIR NEAREST ACCREDITED SERVICE AGENT.

INSTALLATION – SOLAR STORAGE TANK

THIS WATER HEATER IS FOR OUTDOOR INSTALLATION ONLY.
THIS WATER HEATER IS NOT SUITABLE FOR POOL HEATING.
Check the water heater is suitable for the gas type available.
(refer to the rating label on the water heater)

The system is suitable for installation with S200 / SPA2000 or T200 / SCA2000 solar collectors.

IMPORTANT NOTES

- Working on roofs is and should always be considered a hazardous activity, particularly early in the morning, late in the evening, when the roof is wet or during and after periods of rain.
- All work must be carried out in accordance with Local, State and Federal Occupational Safety, Health and Welfare Regulations. In particular, the requirements for safety whilst manual lifting, working at heights and on roofs.
- Installers must be competently trained in:
  - Height Hazard Assessment
  - Working at Height Procedures
  - Assessment / Use / Wearing of correct height safety equipment (harnesses etc.)
  - All other relevant safety factors specific to the installation and maintenance work to be compliant with suitable Occupational, Health and Safety Regulations / Codes.
- All relevant permits shall be obtained from the regulatory authorities before commencing work to install the solar hot water system.
- All work carried out must be performed by appropriately qualified tradespeople or be suitably supervised for trades assistant duties.
- Every care must be taken to protect and warn occupants of the building and the public from personal injury which may occur from falling tools, roof materials, fittings or any other hazards of a general nature.
- Advise the occupants of any inconvenience which may occur due to disconnection of existing water and electrical supplies.
- The connection, attachment, integration or general association of other equipment or parts which either directly or indirectly affect the operation or performance of this equipment could void the Rheem warranty.
- All packaging must be removed from the water heater prior to its installation. This includes the removal of the cardboard base of the carton from the underside of the water heater.

INSTALLATION STANDARDS

The water heater must be installed:

- by a qualified person, and
- in accordance with the installation instructions, and
- in compliance with Standards AS/NZS 3500.4, AS/NZS 3000, AS 5601 or AS/NZS 5601.1, as applicable under local regulations, and all local codes and regulatory authority requirements.

In New Zealand, the installation must also conform to Clause G12 of the New Zealand Building Code.

⚠ **Warning:** Temperature controllers **must not** be fitted to an in-series gas booster as part of a solar water heater system because water at a temperature much higher than the controller setting can be delivered.

Victorian Installers

Notice to Victorian Installers from the Victorian Plumbing Industry Commission if this solar water heater is installed in a new Class 1 dwelling in the State of Victoria. The system model number is to be recorded on the Certificate of Compliance. It is also a requirement to provide the householder with permanent documentation recording the system model number exactly as it is shown in the 'VEET Product Register' published by the Essential Services Commission in Victoria (see www.veet.vic.gov.au). This documentation may be in the form of an indelible label adhered to the solar storage tank, or other suitable form placed in an accessible location, such as the meter box, for later inspection.

WATER HEATER APPLICATION

This water heater is designed for use in a single family domestic dwelling for the purpose of heating potable water. Its use in an application other than this may shorten its life.

If this water heater is to be used where an uninterrupted hot water supply is necessary for the application or business, then there should be back-up redundancy within the hot water system design. This should ensure the continuity of hot water supply in the event that this water heater was to become inoperable for any reason. We recommend you provide advice to the system owner about their needs and building back-up redundancy into the hot water supply system.

Note: AS 3498 requires that a water heater provides the means to inhibit the growth of Legionella bacteria in potable water. This water heater has an in-series gas booster which can satisfy this AS 3498 requirement provided the gas booster is energised, the booster preset outlet temperature setting is 70°C or higher and a remote temperature controller is not used.

SOLAR WATER HEATER STORAGE TANK LOCATION

The solar storage tank is suitable for outdoor installation only. The solar storage tank should be installed close to the most frequently used outlet and its position chosen with safety and service in mind. Make sure people (particularly children) will not touch the flue terminal. The flue terminal and air inlet must be clear of obstructions and shrubbery.

Consideration must also be given to the position of the solar storage tank in relation to the solar collectors. There are limitations on both the maximum length of the solar hot and solar cold pipes and the maximum height between the solar storage tank and the solar collectors. Refer to "Solar Collector Location" on page 28, to "Pipe Lengths" on page 30 and to "Maximum Height To Collectors" on page 32.

Clearance must be allowed for servicing of the solar storage tank and gas booster. The solar storage tank must be accessible without the use of a ladder or scaffold. Make sure the temperature pressure relief valve lever is accessible and the front panel and front covers can be removed for service.

You must be able to read the information on the rating plate. If possible leave headroom of one water heater height so the anode can be inspected or replaced. Remember you may have to remove the entire solar storage tank later for servicing.

The solar storage tank is to be installed at ground or floor level and must stand vertically upright on a stable base as acceptable to local authorities.

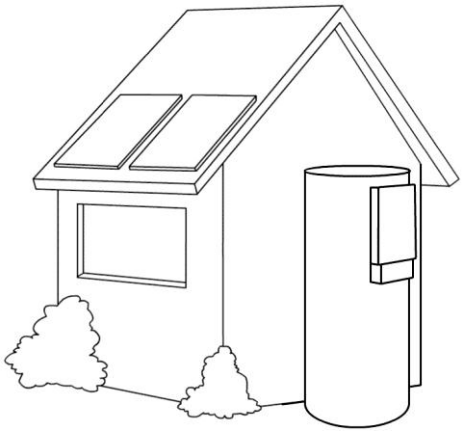

Note: It is important for the solar storage tank to be orientated vertically upright in order for the falling film of closed circuit fluid to operate efficiently.

The top of the solar storage tank must be a minimum of 500 mm below the bottom of the solar collectors for the system to operate correctly.

The water heater must not be installed in an area with a corrosive atmosphere where chemicals are stored or where aerosol propellants are released. Remember the air may be safe to breathe, but when it goes through a flame, chemical changes take place which may attack the water heater.

A secondary flue is not required. The water heater must not be installed indoors or in a confined space.

The water heater must be located to ensure that the location of the flue terminal complies with the requirements of AS 5601 or AS/NZS 5601.1, as applicable under local regulations. As a guide the following requirements are extracted from the Gas Installations Standard. The distances are measured along the wall behind the water heater.

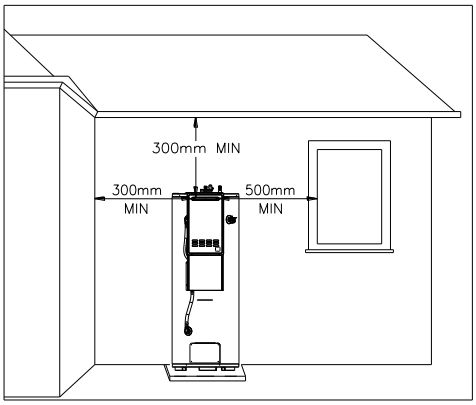

- At least 300 mm between the top of the flue terminal and the eaves.
- At least 500 mm between the flue terminal and the edge of any opening into the building, such as an openable door or window, measured horizontally*.
- At least 1500 mm between the top of the flue terminal and the edge of any opening into the building, such as an openable window, measured vertically.
- At least 300 mm between the flue terminal and a return wall or external corner, measured horizontally*.
- At least 1500 mm between the flue terminal and any opening into a building, in the direction of the flue discharge.
- At least 500 mm between the flue terminal and a fence, wall or other obstruction, in the direction of the flue discharge.

Note: * If these horizontal distances cannot be achieved, AS/NZS 5601.1 states an equivalent horizontal distance measured diagonally from the nearest discharge point of the flue terminal to the opening may be deemed to comply. Check with the local regulator.

The water heater can be turned through 60°, either to the left or to the right, with the discharge from the flue terminal discharging along the wall.

SAFE TRAY

Where damage to property can occur in the event of the water heater leaking, the water heater must be installed in a safe tray. Construction, installation and draining of a safe tray must comply with AS/NZS 3500.4 and all local codes and regulatory authority requirements.

MAINS WATER SUPPLY

Where the mains water supply pressure exceeds that shown in the table below, an approved pressure limiting valve is required and should be fitted as shown in the installation diagram (refer to diagram on page 37).

Model	**270**
Relief valve setting	1000 kPa
Expansion control valve setting *	850 kPa
Max. mains supply pressure	
With expansion control valve	680 kPa
Without expansion control valve	800 kPa
Min. mains supply pressure	140 kPa

* Expansion control valve not supplied with the water heater.

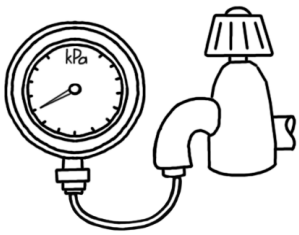

Notes:

- It is not recommended to install this water heater with a low pressure water supply.
- This water heater is not suitable for connection to bore water or spring water unless a water treatment device is fitted.
- If sludge or foreign matter is present in the water supply, it is recommended a suitable filter be incorporated in the cold water line to the water heater.
- Refer to "Water Supplies" on page 12 for further information on water chemistry.

TANK WATER SUPPLY

If the water heater is supplied with water from a tank supply and a minimum water supply pressure of 140 kPa at the water heater cannot be achieved, then a pressure pump system must be installed to allow the gas booster to achieve its rated flow and performance. Care must be taken to avoid air locks. The cold water line from the supply tank should be adequately sized and fitted with a full flow gate valve or ball valve.

RAINWATER COLLECTION SYSTEM

Before installing a closed circuit system, the installer should determine whether rainwater run-off from the roof on which the solar collectors will be mounted, is collected in a rainwater tank. If the solar collectors are to be installed on a section of roof which is part of a rainwater runoff collection system, then it is recommended this section of roof and its gutter be isolated from the rainwater collection system. The gutter should be isolated to a width greater than the solar collectors and pipe work and must have suitable drainage. The installer should ensure in the event of a leak from the closed circuit, a rainwater tank cannot be contaminated with closed circuit fluid.

The closed circuit fluid acts as an anti-freeze agent and rust inhibitor, is non-toxic to humans and is harmless to the environment. However it does have an adverse effect on water stored in rainwater tanks. It will kill microscopic algae typically present in rainwater tanks and cause an unpleasant odour to develop. This will result in the rainwater tank having to be drained and cleaned.

The section of roof and gutter should be isolated from the rainwater collection system before the commissioning of the solar water heater, so that any leak or spillage during commissioning does not make its way into the rainwater tank.

The installer should discuss alternative options to suit the installation with the householder. Any alterations to the roof drainage system must comply with the relevant building regulations, codes and Standards.

Refer to "Rainwater Collection System" on page 7 for additional information on what to do if a rainwater tank does become contaminated with closed circuit fluid.

FREEZE PROTECTION

The water heater has a freeze protection system. The water heater, including the in-series gas booster, is not suitable for installation in areas where the ambient temperature falls below -20°C (including wind chill factor). The closed circuit fluid is an anti-freeze agent which, when mixed to the correct specification, can withstand temperatures of -20°C before it may freeze.

Solar Circuit

To offer protection against freeze damage, the solar circuit must be installed with a continuous fall of a minimum 5° (1 in 10 grade) in the pipe work from the solar collectors to the solar storage tank, with the full length of the solar hot and solar cold pipes insulated and the system charged with correctly mixed closed circuit fluid. The system has NO WARRANTY for freeze damage if there is not a continuous fall in the solar hot and solar cold pipes or they are not insulated in accordance with the installation instructions or the closed circuit fluid has been incorrectly mixed (refer to "Terms of the Rheem Warranty" on page 63 and to "Warning: Plumber Be Aware" on page 31).

The anti-freeze control of the solar circuit is designed so there is no closed circuit fluid in the solar collectors or solar hot and solar cold pipes when the pump is off. The solar circuit only contains closed circuit fluid when the pump is operating during periods of solar gain when heating is required. When the solar pump stops operating, the closed circuit fluid drains back into the storage tank heat exchanger.

Gas Booster Water Heater

The in-series gas booster has a frost protection system. The frost protection system will protect the in-series gas booster from damage by preventing ice forming in its waterways, in the event of freezing conditions occurring.

The frost protection system will be rendered inoperable if electrical power is not available at the in-series gas booster.

Pipe work to and from the in-series gas booster must be adequately insulated to prevent freezing. Refer to AS/NZS 3500.4 for precautions to be taken for installations in frost prone areas.

Damage to the in-series gas booster caused by either the unavailability of power at the gas booster or freezing of the pipe work to or from the gas booster is not covered under the Rheem warranty. Refer to "Terms of the Rheem Warranty" on page 63.

HOT WATER DELIVERY

This water heater can deliver water at temperatures which can cause scalding. This water heater has both a hot water outlet connection and a tempered water outlet connection. The temperature of the water from the hot water outlet can be up to 75°C and the water from the tempered water outlet can be up to 50°C.

The delivery water temperature requirements of AS/NZS 3500.4 allow water in excess of 50°C to be delivered to fixtures not used primarily for ablution purposes, such as in a kitchen or laundry. These types of fixtures can be supplied from the hot water outlet of this water heater.

It is necessary and we recommend that a tempered water line, from the outlet connection of the temperature limiting device, be fitted between the water heater and the hot water outlets in any ablution area such as a bathroom or ensuite, to reduce the risk of scalding. The installing plumber may have a legal obligation to ensure the installation of this water heater meets the delivery water temperature requirements of AS/NZS 3500.4 so that scalding water temperatures are not delivered to a bathroom, ensuite or other ablution area.

The tempered water outlet from this water heater will not deliver temperatures exceeding 50°C, in accordance with AS 4032.2 There is no statutory requirement to fit a supplementary temperature limiting device if this water heater is installed in other than an early childhood centre, school, nursing home or a facility for young, aged, sick or disabled people.

Where another temperature limiting device is installed adjacent to the water heater, the cold water line to the temperature limiting device can be branched off the cold water line either before or after the isolation valve, pressure limiting valve and non-return valve to the water heater. If an expansion control valve is required, it must always be installed after the non-return valve and be the last valve prior to the water heater. The hot water line to this temperature limiting device must be taken from the hot water outlet connection of the water heater and not from the tempered water outlet connection of the water heater.

The temperature limiting device used with a solar water heater should have a specified minimum temperature differential, i.e. between the hot water inlet and the tempered water outlet, of no greater than 10°C.

If a pressure limiting valve is installed on the cold water line to the water heater and the cold water line to another temperature limiting device branches off before this valve or from another cold water line in the premises, then a pressure limiting valve of an equal pressure setting may be required prior to the temperature limiting device.

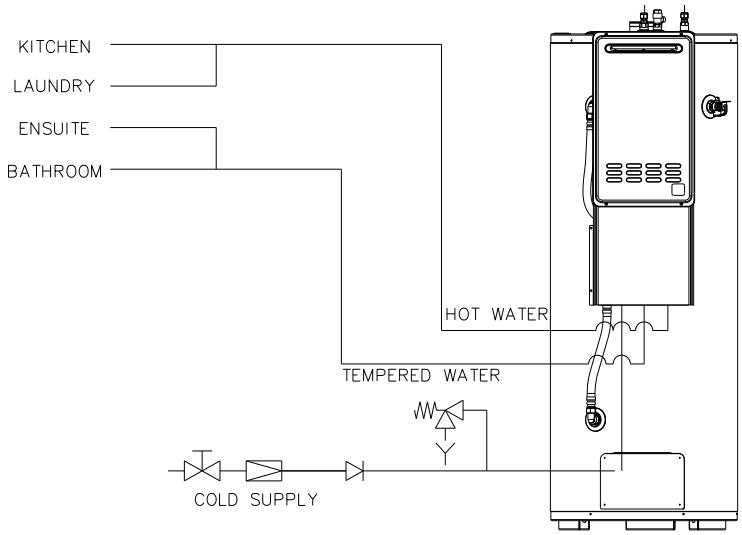

Two Temperature Zones
Using Temperature Limiting Device Integrated with Water Heater

CIRCULATED HOT WATER FLOW AND RETURN SYSTEM

The solar storage tank of a solar water heater should not be installed as part of a circulated hot water flow and return system in a building. The benefits of solar gain will be significantly reduced.

A Rheem 874 627 series continuous flow water heater can be installed as part of a circulated hot water flow and return system in a building. If a circulated flow and return system is required, it is necessary to connect the circulation return line to the in-series gas booster, not the solar storage tank. The connecting pipe work supplied with the water heater may need to be modified in order to install a Tee prior to the water inlet of the in-series gas booster.

Notes:

- AS 3498 requires that a water heater provides the means to inhibit the growth of Legionella bacteria in potable water. The in-series gas booster can satisfy this AS 3498 requirement provided it is energised and the booster preset outlet temperature setting is 70°C or higher.
- The circulator must be:
  - sized and set to provide a minimum flow rate of 3.0 L/min through the circulated hot water flow and return system, and
  - either thermostatically and / or timer controlled.

    The circulator **must not** be set to operate continuously, i.e. 24 hours per day.

Refer to the diagram Circulated Hot Water Flow and Return System – Solar Water Heater on page 24.

Temperature Limiting Device

A temperature limiting device cannot be installed in circulated hot water flow and return pipe work. The tempered water supplied from the tempered hot water outlet on this water heater or from another temperature limiting device cannot be circulated.

Where a circulated hot water flow and return system is required in a building, a temperature limiting device can only be installed on a dead leg, branching off the circulated hot water flow and return pipe or a dead leg installed from the tempered water outlet of this water heater.

If circulated tempered water were to be returned back to the gas booster water heater, then when the hot taps are closed no water will be supplied to the cold water inlet of the temperature limiting device whilst hot water will continue to be supplied to the hot water inlet of the temperature limiting device.

This condition may result in either water at a temperature exceeding the requirements of AS/NZS 3500.4 being delivered to the hot water outlets in the ablution areas, or the device closing completely and not delivering water at all, or the device failing. Under this condition, the operation and performance of the device cannot be guaranteed.

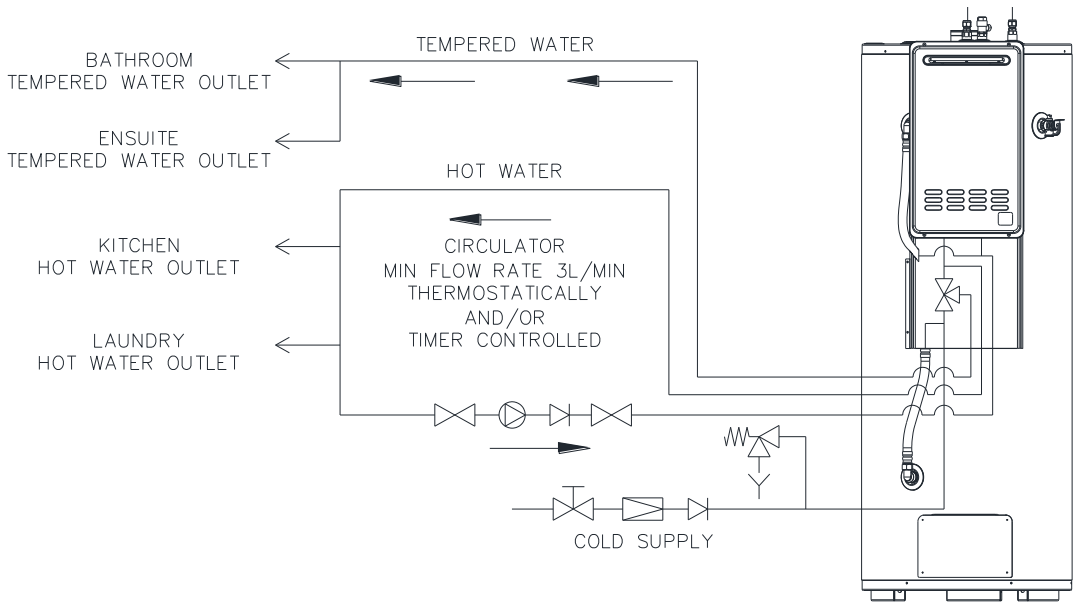

Circulated Hot Water Flow and Return System – Solar Water Heater

REDUCING HEAT LOSSES

The cold water line to and the tempered water and hot water lines from the water heater must be insulated in accordance with the requirements of AS/NZS 3500.4. The insulation must be weatherproof and UV resistant if exposed.

The full length of the solar hot and solar cold pipes between the solar storage tank and the solar collectors **MUST BE** insulated. Refer to "Warning: Plumber Be Aware" on page 31.

ANODE

The vitreous enamel lined cylinder of the water heater is only covered by the Rheem warranty when the total dissolved solids (TDS) content in the water is less than 2500 mg/L and when the correct colour coded anode is used. If an incorrect colour coded anode is used in the water heater, any resultant faults will not be covered by the Rheem warranty. In addition, the use of an incorrect colour coded anode may shorten the life of the water heater cylinder.

The correct colour coded anode for the water supply being used must be selected and fitted to the water heater for the Rheem warranty to apply to the water heater cylinder (refer to "Water Supplies" on page 12 and the Anode Selection chart on page 12). The black anode is typically fitted as standard.

Total Dissolved Solids	Anode colour code
0 – 40 mg/L	Green
40 – 150 mg/L	Green or Black
150 – 400 mg/L	Black
400 – 600 mg/L	Black or Blue
600 – 2500 mg/L	Blue
2500 mg/L +	Blue (no cylinder warranty)

If the water supply has a TDS greater than 150 mg/L and a green anode has not been changed to a black anode, or if the TDS is greater than 600 mg/L and an anode has not been changed to a blue anode, there is the possibility the anode may become overactive and hydrogen gas could accumulate in the top of the water heater during long periods of no use. In areas where this is likely to occur, the installer should instruct the householder on how to dissipate the gas safely (refer to "Caution" on page 13).

SADDLING - PIPE WORK

To prevent damage to the cylinder when attaching pipe clips or saddles to the water heater jacket, we recommend the use of self-drilling screws with a maximum length of 13 mm. Should pre drilling be required, extreme caution must be observed when penetrating the jacket of the water heater.

Note: If the cylinder or other components are damaged as a result of attaching pipe clips or saddles to the jacket, any resultant faults will not be covered by the Rheem warranty.

DIMENSIONS AND TECHNICAL DATA

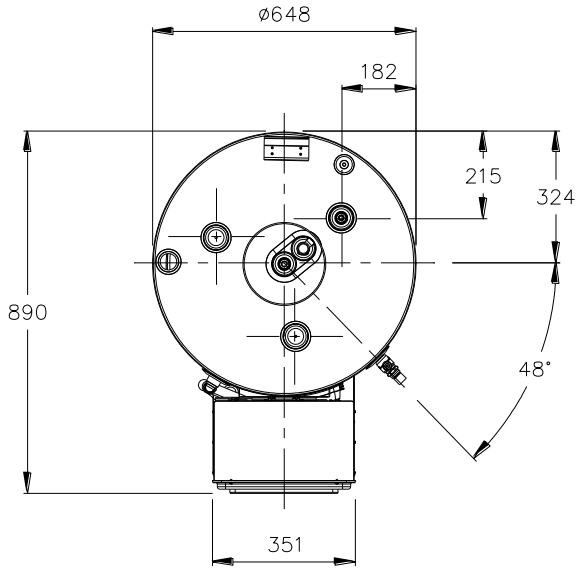

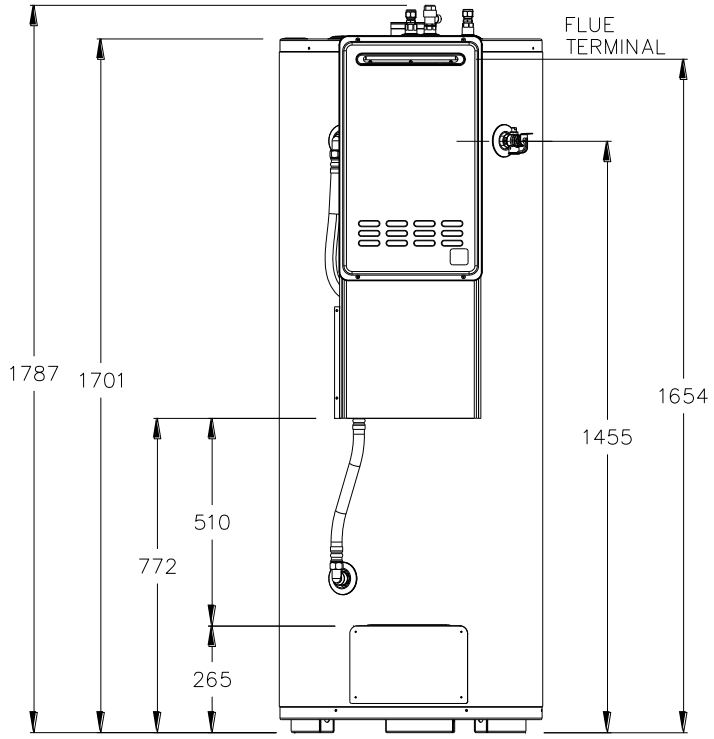

Model	tank	596 270 00	Capacity	270 litres	Mass	141 kg (empty)	411 kg (full)
	gas booster	874 627	Delivery	27 L/min	Mass	24 kg	435 kg incl booster

Gas Booster Details	Gas Booster Model	Delivery @ 25°C rise (litres / min)	Hourly Gas Consumption (MJ)	Min. Gas Pressure (kPa)	Test Point Gas Pressure (kPa)		Max. Gas Pressure (kPa)
					minimum	maximum	
Natural	874 627 NF/J	27	205	1.13	0.193	0.905	3.50
Propane	874 627 PF/J	27	205	2.75	0.277	1.540	3.50

Model numbers: N = Natural, P = Propane. Letter N or P is included in the model number to denote gas type.
F = Frost protection
J = Joey Grey coloured jacket
e.g. 874 627 NF/J.
Technical data is subject to change.

TYPICAL INSTALLATION – OUTDOOR LOCATION

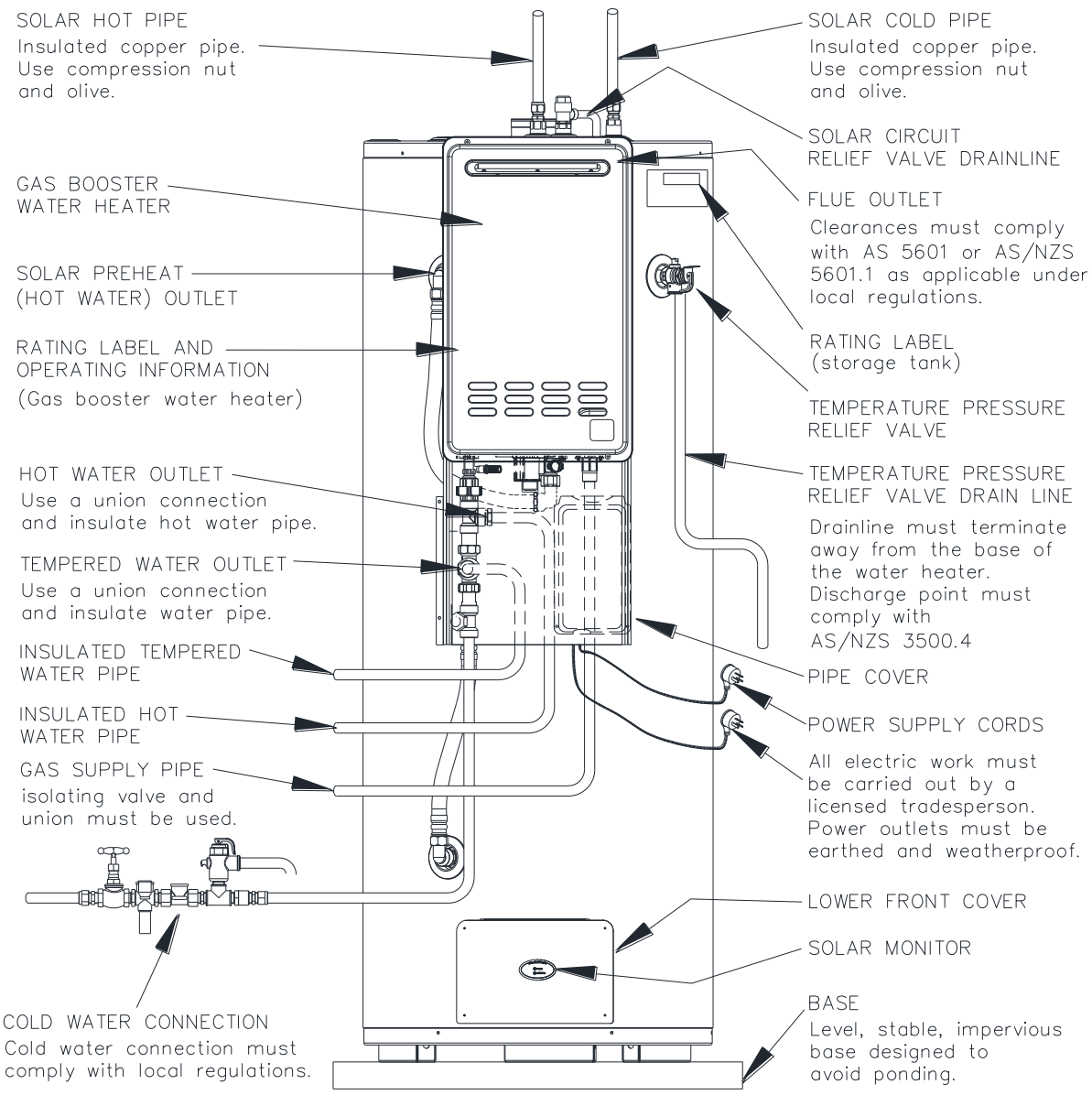

INSTALLATION – SOLAR COLLECTORS

SOLAR COLLECTOR LOCATION

Consideration must be given to the position of the solar collectors in relation to the solar storage tank. There are limitations on both the maximum length of the solar hot and solar cold pipes and the maximum height between the solar storage tank and the solar collectors. Refer to "Solar Water Heater Storage Tank Location" on page 20, to "Pipe Lengths" on page 30 and to "Maximum Height To Collectors" on page 32.

The solar collectors must be installed in a shade free position. The surrounds should be checked for higher buildings or trees which may cause shade at other times of the year and for small trees which may grow and shade the solar collectors in the future.

The installation must comply with the requirements of AS/NZS 3500.4 and all local codes and regulatory authority requirements.

Refer to the installation instructions supplied with the collector kit for details on the installation of the solar collectors.

ROOF STRENGTH

The installer must ensure the structural integrity of the building is not compromised by the solar water heater installation and the roof structure is suitable to carry the full weight of the solar collectors and frame (if one is installed). If in any doubt of the construction or the condition of the roof, the roof should be suitably strengthened. Consult a structural engineer. Each S200 / SPA2000 and T200 / SCA2000 solar collector and its fittings weigh approximately 54 kg when full of closed circuit fluid.

ROOF AREA FOR INSTALLATION

Roof area required for solar collectors:

3 solar collectors	–	3.4 m wide x 2.0 m deep	Weight (full) 162 kg approx.
2 solar collectors	–	2.3 m wide x 2.0 m deep	Weight (full) 108 kg approx.
1 solar collector	–	1.2 m wide x 2.0 m deep	Weight (full) 54 kg approx.

In addition to this area, a minimum one (1) metre clearance is recommended on all four sides of the solar collectors for safe service access.

Maximum Number of Collectors

The maximum recommended number of collectors for this drain back closed circuit system are:

270 litre tank	–	3 x S200 / SPA2000, T200 / SCA2000 collectors

ORIENTATION OF SOLAR COLLECTORS

To help maximise system performance, solar collectors should be installed with an optimum orientation facing true north (in the southern hemisphere) or true south (in the northern hemisphere). Always check for true north or true south using a compass or other suitable device.

The solar performance of a system reduces as the orientation of the collectors moves away from the optimum orientation, resulting in the need for increased boosting to supply the same hot water load. Solar collectors facing up to 45° from the optimum orientation will receive about 4% to 5% less total solar radiation.

However, the optimum orientation of solar collectors is not always practical or achievable. Solar collectors may be installed up to 90° from the optimum orientation. Where the orientation is greater than 60° from the optimum, either an additional solar collector or selective surface collectors in lieu of non selective surface collectors may be installed to make up for the reduction in solar performance.

Each of these options should be discussed with the system owner. If neither of these options is possible nor acceptable to the system owner, then the system owner needs to be made aware of, understand and accept that increased boosting may be required to meet their hot water requirements.

INCLINATION OF SOLAR COLLECTORS

To help maximise system performance, solar collectors should be installed with an optimum inclination. This is equal to 90% to 100% of the local latitude angle when collectors are oriented within 60° of true north or true south, and generally between 10° and 20° when the collectors are oriented between 60° and 90° from the optimum orientation.

Generally, improved summer performance is obtained from an angle of inclination less than the optimum angle and improved winter performance is obtained by an angle of inclination greater than the optimum angle. If the angle of inclination varies by 20° from the optimum angle, the solar collectors will receive about 10% less total annual solar radiation. The latitude of some Australian cities are listed on page 29.

However, the optimum inclination of solar collectors is not always practical or achievable. Solar collectors may be installed at the roof angle for simplicity of installation and appearance, but must never be less than 10° from the horizontal for a closed circuit drain back system.

The solar collectors, when installed with the supplied mounting system, are suitable for installations with an inclination of up to 45°. Where the solar collectors are installed at inclinations greater than 45°, a With Pitch frame is necessary. Contact Rheem or your local Rheem Solar Water Heater Distributor for details.

A Variable Pitch frame can be installed to increase the angle of inclination of the solar collectors used in a solar pumped water heater installation. This type of frame should be used if the roof pitch is less than 10° or varies by more than 20° below the optimum angle. Contact Rheem or your local Rheem Solar Water Heater Distributor for details.

The use of a Variable Pitch frame should be discussed with the system owner. If this option is neither possible nor acceptable to the system owner, then the system owner needs to be made aware of, understand and accept that solar system performance will be reduced and increased boosting may be required to meet their hot water requirements.

CYCLONIC OR HIGH WIND AREAS

For an installation of solar collectors on a pitched roof in a cyclonic or high wind area, a suitable With Pitch frame is required. Contact Rheem or your local Rheem Solar Water Heater Distributor for details.

The installation of these solar collectors on a suitable frame, subject to the frame's design criteria not being exceeded:

- may be suitable for installation in geographic locations up to and within Wind Region D (With Pitch frame) or up to and within Wind Region C (Variable Pitch frame), as defined in the Building Code of Australia, Australian Standard AS 4055 and the Australian / New Zealand Standard AS/NZS 1170.2, or equivalent locations, and
- may provide an acceptable method of installation where it is necessary to satisfy the requirements of the Building Code of Australia and Australian / New Zealand Standard AS/NZS 3500.4:2003 Clause 6.5.3.4 for high wind areas, or equivalent requirements.

LATITUDE OF SOME AUSTRALIAN CITIES

Adelaide	35°S	Cairns	17°S	Hobart	42°S	Port Hedland	20°S
Alice Springs	24°S	Canberra	35°S	Mildura	34°S	Rockhampton	24°S
Brisbane	27°S	Darwin	12°S	Melbourne	38°S	Sydney	34°S
Broken Hill	31°S	Geraldton	28°S	Perth	32°S	Townsville	19°S

PIPE LENGTHS

The solar hot and solar cold pipes between the solar storage tank and the solar collectors shall:

- be of DN15 bendable grade or hard drawn copper tube.

  Annealed or soft copper shall not be used.

- have a continuous fall from the solar collectors to the solar storage tank of a minimum 5° (1 in 10 grade) and be of a design to ensure complete drain back of the closed circuit fluid.

  Care must be taken to ensure the pipe work maintains a continuous fall over the life of the installation. Pipe work should be fixed at regular intervals to assist in maintaining this requirement.

- not exceed the maximum recommended lengths as specified in the table.

Maximum recommended total combined pipe length (solar hot + solar cold) and number of 90° bends				
Pipe Size	1 or 2 Collectors		3 Collectors	
	Pipe Length	90° Bends	Pipe Length	90° Bends
DN15	40 metres	20	30 metres	20

For each additional 90° bend, reduce the maximum total pipe length by 0.5 metres.
For each additional metre of pipe length, reduce the number of 90° bends by two.
Note: One 90° elbow is equal to two 90° bends.

Notes:

- It is important to connect the solar hot and solar cold pipes to the correct connections at the solar collector and at the solar storage tank.

- The solar cold pipe connects to the bottom of the solar collector array and may connect to either the left or right hand side. The solar hot pipe must connect to the top of the solar collector array diagonally opposite to the solar cold pipe connection. The solar hot outlet connection is to be the highest point of the system.

  The lowest corner of the solar collector installation in a closed circuit system, which is where the solar cold pipe connects to the collector array, should be the corner closest to the solar storage tank. This will maximise the gradient for the continuous fall of the solar cold pipe, by providing a shorter lateral distance for the vertical fall of pipe work.

- The hot sensor connection is at the top of the solar collector array, directly above the solar cold inlet connection for this closed circuit system.

- Refer to "Warning: Plumber – Be Aware" on page 31.

It is essential for these requirements to be followed for the system to operate correctly and efficiently. Solar pipe work which is oversized, or does not have the correct fall, or is too long can result in the drain back system not operating effectively.

WARNING: Plumber – Be Aware

- The solar hot and solar cold pipes between the solar storage tank and the solar collectors **MUST BE** of copper. All compression fittings must use brass or copper olives.
- The full length of the solar hot and solar cold pipes **MUST BE** insulated.

  The insulation must:

  - be of a closed cell type or equivalent, suitable for a solar water heating application and capable of withstanding the temperature of the closed circuit fluid generated by the solar collectors under stagnation conditions

    The specification of the chosen insulation material should be checked with the insulation manufacturer prior to installation as different materials may vary in temperature tolerance.
  - be at least 13 mm thick, however thicker insulation may be required to comply with the requirements of AS/NZS 3500.4
  - be weatherproof and UV resistant if exposed
  - extend through any penetrations in the eaves, ceiling and roof
  - cover valves and fittings in the solar pipe work
  - be fitted up to and cover the connections on both the solar storage tank and the solar collectors.

  The insulation will offer protection to a metal roof against corrosion due to water running off the copper pipes, assist in avoiding accidental contact with the solar pipe work as very high temperature closed circuit fluid can flow from the solar collectors to the solar storage tank, and also reduce pipe heat losses.

- The highest point of the solar hot and solar cold pipes must be where they connect to the solar collectors. There **MUST BE a continuous fall** of a minimum 5° (1 in 10 grade) in the pipe work from the solar collectors to the solar storage tank for efficient and complete drain back of the closed circuit fluid to occur.

  The system has NO WARRANTY for freeze damage if there is not a continuous fall in the solar hot and solar cold pipes, or they are not insulated in accordance with the installation instructions, or the closed circuit fluid has been incorrectly mixed.

- The insulated copper pipe work:

  - should be fixed at suitable locations to prevent or reduce the possibility of noise from water hammer and vibration from occurring
  - is not to be placed or installed in contact with plastic pipe work.

    Likewise, plastic pipe work is not to be placed or installed in contact with the insulated copper pipe work after the solar circuit is installed.

- Plastic pipe **MUST NOT** be used, as it will not withstand the temperature of the closed circuit fluid generated by the solar collectors under stagnation conditions. Extremely high closed circuit fluid temperatures up to 150°C for non-selective surface collectors and greater than 200°C for selective surface collectors can be generated under these conditions. Plastic pipe cannot withstand these temperatures and **MUST NOT** be used. Failure of plastic pipe can lead to the release of high temperature closed circuit fluid and cause severe water damage and flooding.

- The pressure applied to the solar circuit and solar collectors during a pressure test of a closed circuit system **MUST NOT** exceed 200 kPa, otherwise damage may result. Refer to "Pressure Testing" on page 33.

Maximum Height To Collectors

The solar collectors must be the highest point of the system. The maximum height of the solar installation, from the base of the solar storage tank to the top of the solar collectors, is 9 m for this closed circuit system. The pump supplied with the solar storage tank will not circulate closed circuit fluid through heights greater than 9 m and solar gain will not be achieved.

For heights greater than 9 m, an auxiliary pump (kit PN 299914) must be installed above and within 1 m of the solar storage tank. The installation of an auxiliary pump will enable a maximum height of 18 m to be achieved. Refer to "Auxiliary Pump" on page 43.

Note: The top of the solar storage tank must be a minimum of 500 mm below the bottom of the solar collectors for the system to operate correctly.

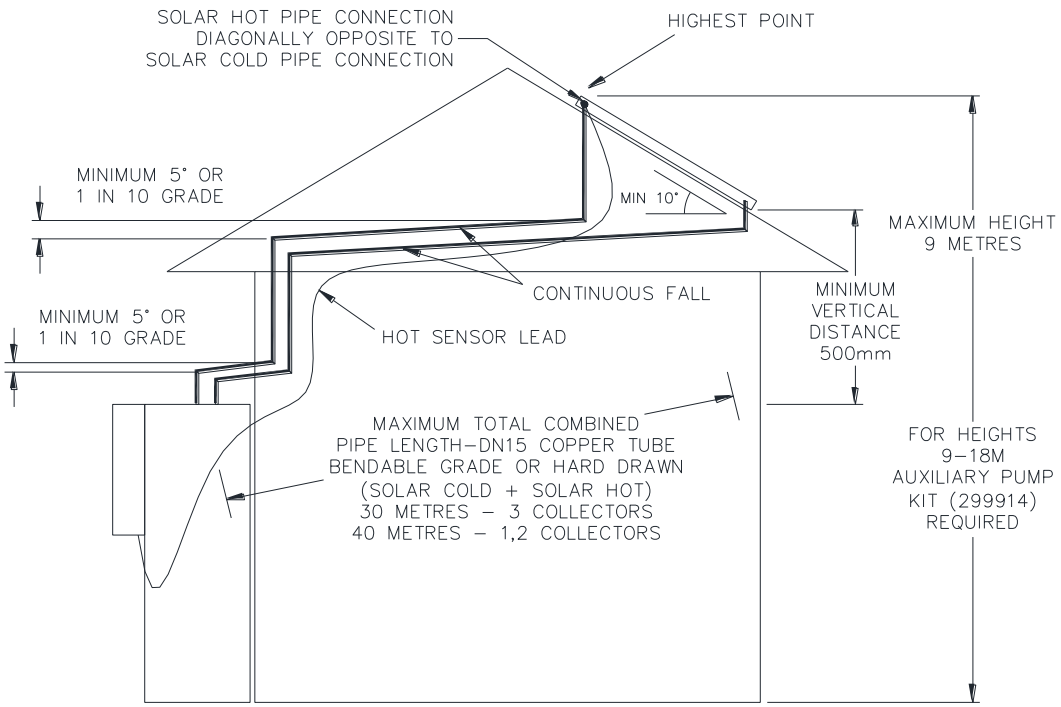

NOTES:

- PIPE WORK MUST HAVE A CONTINUOUS FALL OF NOT LESS THAN 5° (1 IN 10 GRADE) FROM THE SOLAR COLLECTORS TO THE SOLAR STORAGE TANK.
- PIPE WORK MUST BE OF BENDABLE GRADE OR HARD DRAWN DN15 COPPER TUBE. ANNEALED OR SOFT COPPER SHALL NOT BE USED.
- THE LOWEST CORNER OF THE SOLAR COLLECTOR INSTALLATION (SOLAR COLD CONNECTION) SHOULD BE THE CORNER CLOSEST TO THE SOLAR STORAGE TANK.
- INSTALL HOT SENSOR LEAD WITH INSULATED SOLAR PIPES DURING CONSTRUCTION FOR NEW HOMES.
- PRESSURE TESTING OF SOLAR COLLECTORS AND SOLAR CIRCUIT MUST NOT EXCEED 200KPa.

Closed Circuit System – Drain Back Solar 270 Litre Tank Pipe Work Installation Requirements

Pressure Testing

The solar water heater, including the collector circuit, is to be isolated during the testing and commissioning of the heated water reticulation system in a building, in accordance with Clause 11.1 and 11.3 (a) of AS/NZS 3500.4:2003. The collector circuit includes the solar hot and solar cold pipes and solar collectors.

It may be necessary to pressure test the collector circuit to comply with codes and regulatory authority requirements or on other occasions where the solar collectors and solar hot and solar cold pipes are installed prior to the solar storage tank, such as on a building site.

Collector Circuit

⚠ **Warning:** The pressure applied to the collector circuit during a pressure test of a closed circuit system **MUST NOT** exceed 200 kPa, otherwise damage may result to the solar collectors. The solar circuit and solar collectors are to be isolated from the solar storage tank for the duration of the pressure test.

S200 / SPA2000 and T200 / SCA2000 Solar Collector Installations

If water is used as the pressure testing medium and if the collector circuit is not to be connected to the solar storage tank and the system commissioned on the same day, then any excess moisture needs to be blown out and the collector circuit and solar collectors dried using dry compressed air.

It is necessary to cap off the ends of the solar hot and solar cold pipes if they are not connected to the solar storage tank at the time of installation and at the time of testing the solar circuit.

Closed Circuit System

If the solar collectors, solar pipe work and solar storage tank are installed and commissioned together, then the flooding of the collector circuit with closed circuit fluid for a closed circuit system and checking the pipe work for leaks during the commissioning procedure can be substituted for the pressure testing of the collector circuit.

GAS BOOSTER BRACKETS

It is necessary to remove, reposition and refit the top and bottom mounting brackets of the gas booster so it can be mounted onto the storage tank.

- Remove the screws securing the top bracket at the rear of the gas booster, rotate the bracket through 180° and refit the screws in the same locating holes.
- Remove the screws securing the bottom bracket at the rear of the gas booster, reposition the bracket across to the right of the gas booster (as viewed from the rear face) and refit the screws in the locating holes.

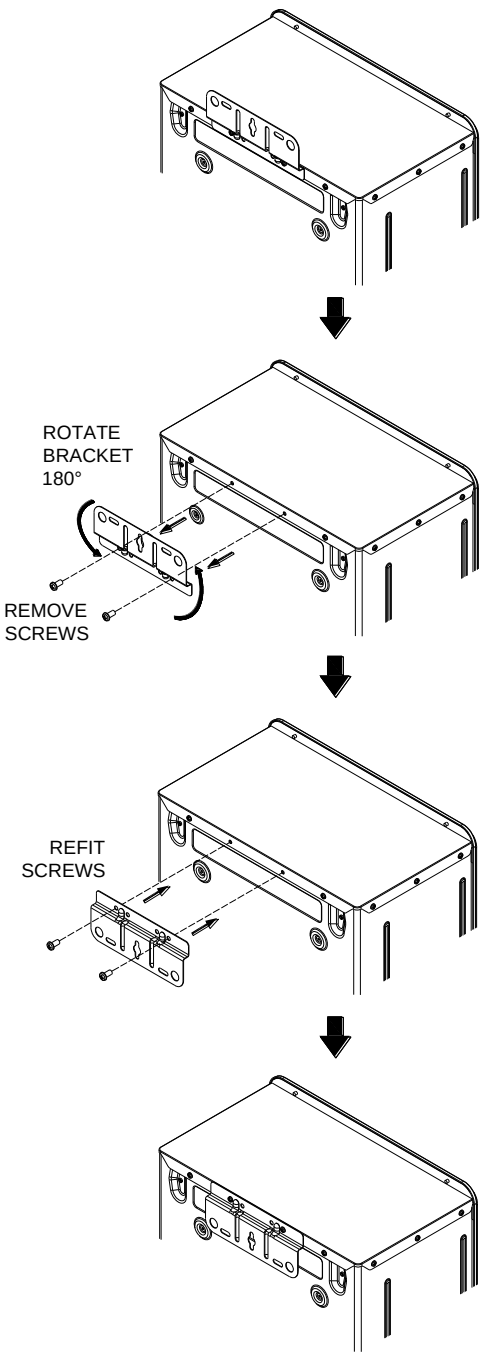

repositioning top mounting bracket

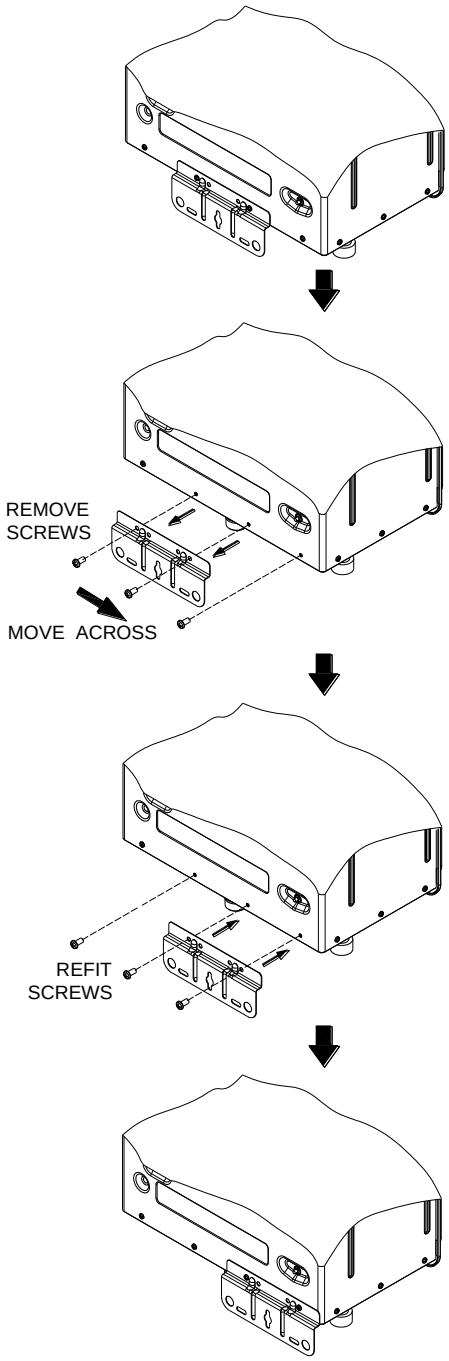

repositioning bottom mounting bracket

MOUNTING THE GAS BOOSTER TO THE STORAGE TANK

The gas booster is required to be mounted on the solar storage tank. They are connected together with the supplied fittings.

Use thread sealing tape or approved thread sealant on all fittings. Numbers in parentheses refer to items shown in the diagram on page 36.

To mount the gas booster to the storage tank:

- Fit the hot connection assembly (1) to the solar hot water outlet of the storage tank and orientate the assembly vertically downwards.
- Fit the cold connection assembly (2) to the cold water inlet of the storage tank and orientate the assembly vertically upwards.
- Fit the ¾" M x ¾" F elbow (8) to the water inlet on the underside of the gas booster and orientate the elbow pointing to the left (when viewed from the front) of the gas booster.

  Note: The elbow must be fitted prior to them mounting of the gas booster to the storage tank. Otherwise the upper front cover opening will interfere with the elbow.
- Fit the gas booster (3) to the mounting bracket on the storage tank by hooking the top bracket of the gas booster over the mounting bracket.
  - Secure the gas booster to the bottom left of the mounting bracket using the mounting screw and spring washer (12) provided.
- Place the washer (4) supplied inside of the fitting of the water connection plumbing assembly (5) which connects to the hot water outlet of the gas booster.
- Connect the water connection plumbing assembly (5), with the 550 mm long insulated flexible hose (7) attached, to the hot water outlet of the gas booster.

  Note: The water connection assembly components are supplied only hand tightened. Each component is to be firmly connected using thread sealing tape or approved thread sealant.
- Place the bracket support (6) over the temperature limiting device outlet of the water connection plumbing assembly (5) and fix to the jacket of the storage tank to secure the water connection plumbing assembly in position, using the screws provided.
- Connect the free end of the flexible hose (7) attached to the water connection plumbing assembly (5) to the cold connection assembly (2) on the storage tank.

  Ensure the hose is not kinked.
- Connect one end of the 425 mm long insulated flexible hose (9) to the elbow fitting (8) on the inlet of the gas booster and the other end to the hot connection assembly (1) on the storage tank.

  Ensure the hose is not kinked.

  Notes:
  - If the flexible hose has a brass extension piece at one end, ensure this end is connected to the elbow fitting (8) at the inlet of the gas booster.
  - Connect this end prior to connecting the other end to the hot connection assembly (2).
- Position the front pipe cover (10) underneath the gas booster and over the plumbing fittings.
  - Secure in position with the four screws (11) provided.

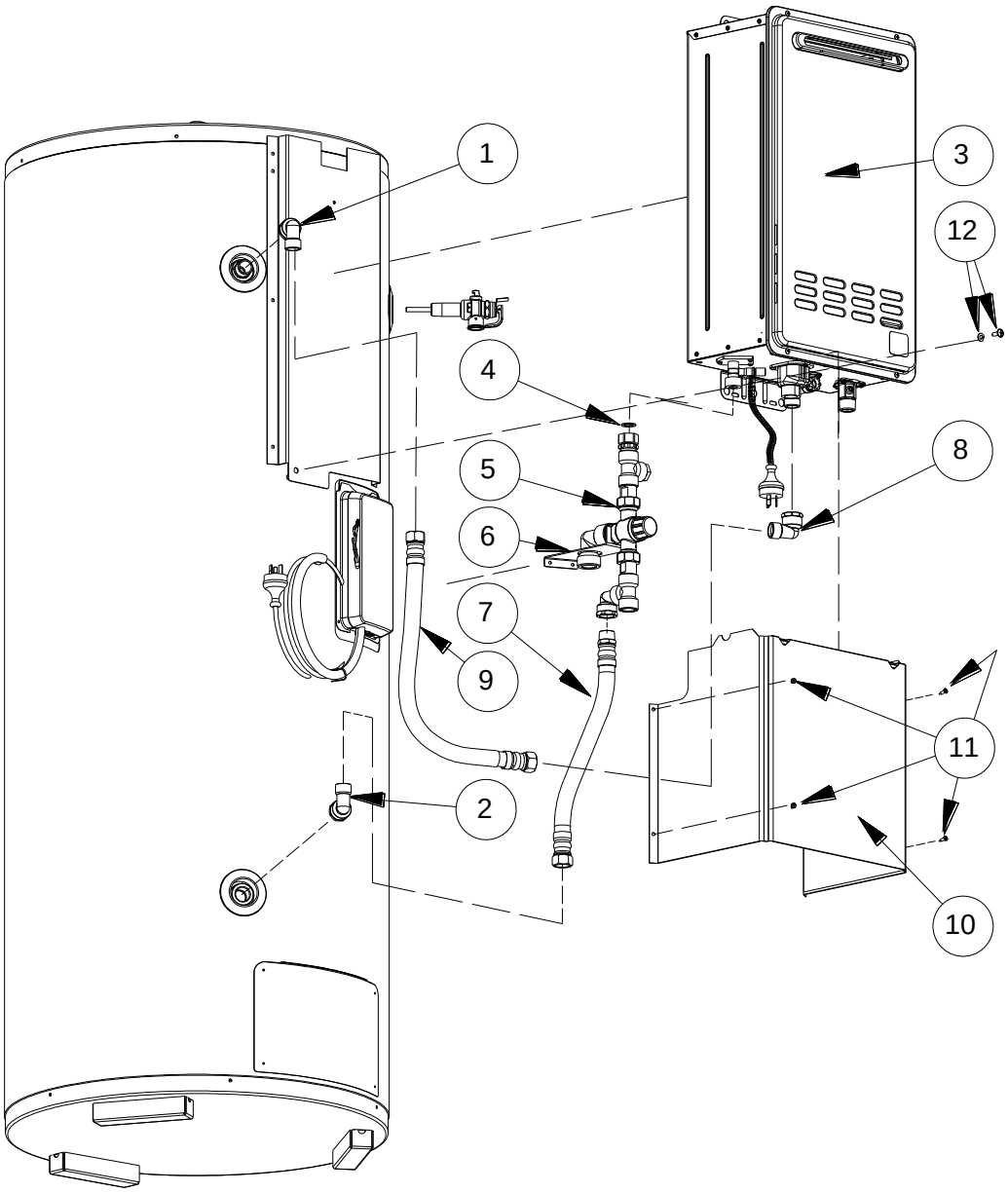

Components for Assembly of Storage Tank and Gas Booster

1. Hot connection assembly
2. Cold connection assembly
3. Gas booster water heater
4. Washer 24 OD x 16 ID x 1.5 thick
5. Water connection plumbing assembly
6. Bracket support
7. Flexible hose (cold inlet connection) 550 mm long
8. Elbow fitting ¾” M x ¾” F Rye 2504
9. Flexible hose (solar outlet connection) 425 mm long
10. Front pipe cover
11. Screws No 8 x 13
12. Screw M6 x 16 and spring washer

CONNECTIONS – PLUMBING

All plumbing work must be carried out by a qualified person and in accordance with the requirements of the Standard AS/NZS 3500.4, and all local codes and regulatory authority requirements. In New Zealand, the installation must conform to Clause G12 of the New Zealand Building Code.

All gas work must be carried out by a qualified person and in compliance with the Standard AS 5601 or AS/NZS 5601.1, as applicable under local regulations, and all local codes and regulatory authority requirements.

It is necessary to remove the pipe cover (if attached) from underneath the gas booster, by undoing the retaining screws, in order to make the water and gas connections to the water heater. Refit the pipe cover at the completion of the installation.

CONNECTION SIZES

- Hot water connection: Rp 3/4.
- Cold water connection: Rp 3/4.
- Tempered water connection: Rp 3/4
- Solar hot (from collector) connection: DN15 compression fitting.
- Solar cold (to collector) connection: DN15 compression fitting.
- Temperature Pressure Relief valve connection: Rp 1/2.
- Solar circuit pressure relief valve connection: G 1/2.
- Gas connection: R 3/4.

WATER INLET AND OUTLETS

All pipe work must be cleared of foreign matter before connection and purged before attempting to operate the water heater. All olive compression fittings must use brass or copper olives. Use an approved thread sealant such as Teflon tape on all other threaded joints. Conetite or O-ring fittings do not require a thread sealant.

An isolation valve and non-return valve must be installed on the cold water line to the water heater. An acceptable arrangement is shown in the diagram. Refer also to "Hot Water Delivery" on page 23 and to "Mains Water Supply" on page 21. The plumbing arrangements for the cold water inlet, tempered water and hot water outlets are shown on page 37. The solar hot and solar cold pipe connections are shown on page 40.

A disconnection union must always be provided at the cold water inlet, tempered water and hot water outlets on the water heater to allow for disconnection of the water heater. It is necessary to remove the brass plug from the hot water outlet fitting if a hot water line is to be installed. This plug can be used to plug the tempered water outlet if a tempered water line is not being installed. Refer to the diagram for the connection points to the water heater.

Insulation used on the tempered water and hot water lines must extend up to the outlets of the water heater. The valve and fittings must also be insulated up to the hot water outlet of the gas booster.

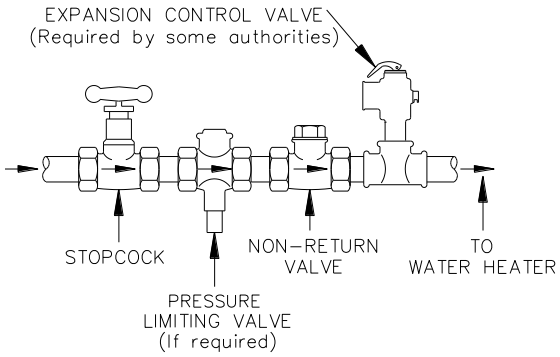

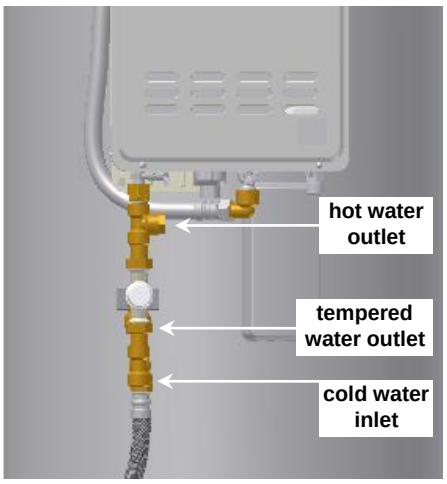

This solar storage tank has either a plastic dip tube or fitting liner in the inlet and outlet fittings (see diagram). These must be in place for the water heater to function properly. Do not remove or damage them by using heat nearby. They will be pushed into the correct position as the fitting is screwed in.

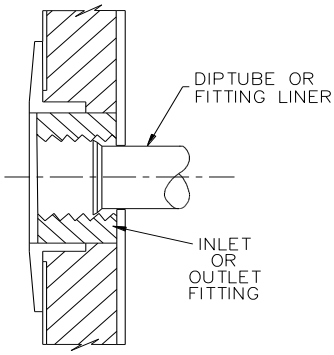

Note: The solar storage tank of a solar water heater should not be installed as part of a circulated hot water flow and return system in a building. The benefits of solar gain will be significantly reduced. If a circulated flow and return system is required, it is necessary to connect the return line to the in-series booster, not the solar storage tank. Refer to "Circulated Hot Water Flow and Return System" on page 24.

PIPE SIZES

To achieve true mains pressure operation, the cold water line to the water heater should be the same size or bigger than the tempered water and hot water lines from the water heater. The minimum recommended tempered pipe and hot pipe sizes are DN20.

The pipe sizing for hot water supply systems should be carried out by persons competent to do so, choosing the most suitable pipe size for each individual application. Reference to the technical specifications of the water heater and local regulatory authority requirements must be made.

TEMPERATURE PRESSURE RELIEF VALVE

The temperature pressure relief valve is shipped behind the lower front cover of the water heater. The temperature pressure relief valve must be fitted before the water heater is operated. Before fitting the relief valve, make sure the probe has not been bent. Seal the thread with an approved thread sealant such as Teflon tape - never hemp. Make sure the tape does not hang over the end of the thread.

Screw the valve into the correct opening (refer to the installation diagram on page 27) leaving the valve outlet pointing downwards. Do not use a wrench on the valve body - use the spanner flats provided. A copper drain line must be fitted to the temperature pressure relief valve (refer to "Relief Valve Drain" on page 39).

The valve must be insulated with closed cell polymer insulation or similar (minimum thickness 9 mm) and the insulation installed so as not to impede the operation of the valve. The insulation must be weatherproof and UV resistant if exposed.

EXPANSION CONTROL VALVE

Local regulations may make it mandatory to install an expansion control valve (ECV) in the cold water line to the water heater. In other areas, an ECV is required if the saturation index is greater than +0.4 (refer to "Water Supplies" on page 12).

The expansion control valve must always be installed after the non-return valve and be the last valve installed prior to the water heater (refer to diagrams on page 37). A copper drain line must be fitted to the expansion control valve (refer to "Relief Valve Drain" on page 39).

The valve, if installed within 500 mm of the water heater, must be insulated with closed cell polymer insulation or similar (minimum thickness 9 mm) and the insulation installed so as not to impede the operation of the valve. The insulation must be weatherproof and UV resistant if exposed.

RELIEF VALVE DRAIN

DN15 copper drain lines must be fitted to the temperature pressure relief valve, expansion control valve (if one is installed) and solar circuit relief valve to carry the discharge clear of the water heater. Connect the drain lines to the valves using disconnection unions. The drain line from the valve to the point of discharge should be as short as possible, have a continuous fall all the way from the water heater to the discharge outlet and have no tap, valves or other restrictions in the pipe work.

A drain line from a relief valve must comply with the requirements of AS/NZS 3500.4.

A drain line must be no longer than 9 metres with no more than three bends greater than 45° before discharging at an outlet or air break. The maximum length of 9 metres for a drain line is reduced by 1 metre for each additional bend required of greater than 45°, up to a maximum of three additional bends. Where the distance to the point of final discharge exceeds this length, the drain line can discharge into a tundish.

Subject to local regulatory authority approval, the drain lines from the temperature pressure relief valve and expansion control valve from an individual water heater may be interconnected.

The outlet of a drain line must be in such a position that flow out of the pipe can be easily seen, but arranged so discharge will not cause injury, damage or nuisance. The termination point of a drain line must comply with the requirements of AS/NZS 3500.4. Drain lines must not discharge into a safe tray.

In locations where water pipes are prone to freezing, drain lines must be insulated, must not exceed 300 mm in length and are to discharge into a tundish through an air gap of between 75 mm and 150 mm.

If a drain line discharges into a tundish, the drain line from the tundish must be not less than DN20. The drain line from a tundish must meet the same requirements as for a drain line from a relief valve.

⚠ **Warning:** As the function of the temperature pressure relief valve on this water heater is to discharge high temperature water under certain conditions, it is strongly recommended the pipe work downstream of the relief valve be capable of carrying water exceeding 93°C. Failure to observe this precaution may result in damage to pipe work and property.

GAS INLET

The gas connection is made at the underside of the gas booster. The pipe work must be cleared of foreign matter before connection and purged before attempting to operate the water heater. An isolation valve and disconnection union must be installed to allow servicing and removal of the water heater (refer to the diagram on page 39).

Note: Refer to the Gas Installations Standard AS 5601 or AS/NZS 5601.1 for the correct method of sizing the gas supply pipe to the water heater. The pipe size selection must take into account the high gas input of the gas booster (refer to table on page 26) as well as all of the other gas appliances in the premises.

⚠ **Warning:** Always isolate the gas booster before pressure testing the gas supply system. Disconnect the gas booster after the isolating cock to prevent the risk of serious damage to the gas control. The Rheem warranty does not cover damage of any nature resulting from failure to observe this precaution. Refer to rating label for gas types and pressures.

SOLAR INLET AND OUTLET

All pipe work must be cleared of foreign matter before connection and purged before attempting to operate the water heater. All olive compression fittings must use brass or copper olives. Use an approved thread sealant such as Teflon tape on all fittings.

The solar cold outlet and solar hot inlet connections are located at the top of the solar storage tank.

Notes:

- It is important not to cross connect the solar hot and solar cold pipes to the incorrect connections.
  - The solar cold pipe connects to the bottom of the solar collectors and the solar hot pipe connects to the top of the solar collectors on the opposite side to both the solar cold pipe connection and the hot sensor connection.
  - The solar hot inlet connection is located in the centre of the top of the solar storage tank (the connection is marked by a label on top of the storage tank).
  - The solar cold outlet connection is located toward the outer edge of the top of the solar storage tank (the connection is marked by a label on top of the storage tank).
- Connect the solar pipes to the solar storage tank using only the fittings supplied.

To connect the solar hot and solar cold pipes to the solar storage tank:

- Remove the compression nut and olive from the solar hot inlet fitting at the top of the solar storage tank. Remove the rubber washer from the union and discard.
- Remove the plastic cap from the solar cold outlet pipe end at the top of the solar storage tank.
- Fit the compression union supplied to the solar cold outlet pipe end.
- Connect the solar cold pipe (flow to the collector) to the nipple in the solar cold outlet using the compression nut and olive supplied.
- Connect the solar hot pipe (flow from the collector) to the nipple in the solar hot inlet using the compression nut and olive supplied.

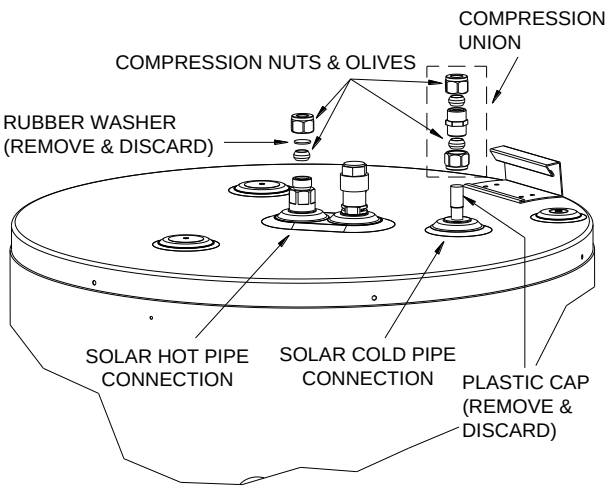

AUXILIARY PUMP

The maximum height of the solar installation from the base of the solar storage tank to the top of the solar collectors is 9 m. The pump supplied with the solar storage tank will not circulate closed circuit fluid through heights greater than 9 m and solar gain will not be achieved.

For heights greater than 9 m, an auxiliary pump (kit PN 299914) must be installed. The installation of an auxiliary pump will enable a maximum height of 18 m to be achieved. Refer to “Auxiliary Pump” on page 43.

CONNECTIONS – ELECTRICAL

The power supply to the water heater must not be switched on until the solar storage tank is filled with water.

MEGGER READING

It is not mandatory to conduct a megger test on a plug in appliance, however if a megger test is conducted on this water heater, then the following should be noted.

⚠ **Warning:** This water heater contains electronic equipment and 500 V insulation tests must only be conducted between either active and earth or neutral and earth. An active to neutral test WILL damage the electronics.

An insulation test result of approximately 660 KΩ for this water heater is normal.

Typically the insulation resistance between live and earthed parts of an electrical installation should not be less than 1 MΩ. However AS/NZS 3000:2000 clause 6.3.3.3.2 'Results' states:

"The value of 1 MΩ may be reduced to:

- 0.01 MΩ for sheathed heating elements or appliances; or
- a value permitted in the Standard applicable to electrical equipment."

This model water heater is categorised as a 'stationary class 1 motor operated appliance' and has been tested to AS/NZS 3350.1:2002 clause 16 'Leakage current and electric strength' and has passed the requirements of this Standard. Therefore, this model water heater complies with the condition stated in AS/NZS 3000:2000 clause 6.3.3.3.2 (b).

ELECTRICAL CONNECTION

All electrical work and permanent wiring must be carried out by a qualified person and in accordance with the Wiring Rules AS/NZS 3000 and all local codes and regulatory authority requirements.

⚠ **Warning:** Temperature controllers **must not** be fitted to an in-series gas booster as part of a solar water heater system because water at a temperature much higher than the controller setting can be delivered.

The solar storage tank and gas booster both require a 240 V AC, 50 Hz mains power supply for operation. The solar storage tank and gas booster are both supplied with a 1.8 metre power cord and each require their own switched general purpose outlet (GPO) to be located within 1.2 metres of the installation. Two GPOs are required and each GPO must have a continuous power supply. The GPOs are required to be weatherproof if installed outdoors.

The power consumption of the water heater is:

Component	Power consumption	Comments
Solar controller	3 Watts	Constant load
Solar pump	165 Watts	Maximum load at solar heating cycle start up (for approximately two (2) minutes)
	50 Watts	Average load during the solar heating cycle
Gas booster	80 Watts	Burner on, anti-frost device inactive
	175 Watts	Burner on, anti-frost device active

The solar storage tank and gas booster will only operate on a sine wave at 50 Hz. Devices generating a square wave cannot be used to supply power to the water heater.

HOT SENSOR LEAD

House the hot sensor lead at the water heater in the flexible conduit provided and secure the conduit in the cut out on the tab located behind the upper front cover. Connect the hot sensor cable to the hot sensor cable connector located on the tab behind the upper front cover. Secure the hot sensor lead to the water heater jacket to prevent possible damage.

TEMPERATURE SETTING

The gas booster outlet temperature setting can be adjusted. The adjustment procedure is detailed in the Owner's Guide and Installation Instructions supplied with the gas booster. The factory preset outlet booster temperature setting is 60°C.

Note: AS 3498 requires that a water heater provides the means to inhibit the growth of Legionella bacteria in potable water. The in-series gas booster can satisfy this AS 3498 requirement provided it is energised, the booster preset outlet temperature setting is 70°C or higher and a remote temperature controller is not used.

AUXILIARY PUMP

The auxiliary pump, if installed, must be wired to the control board. Refer to "Auxiliary Pump – Electrical Connection" on page 45.

WIRING DIAGRAM

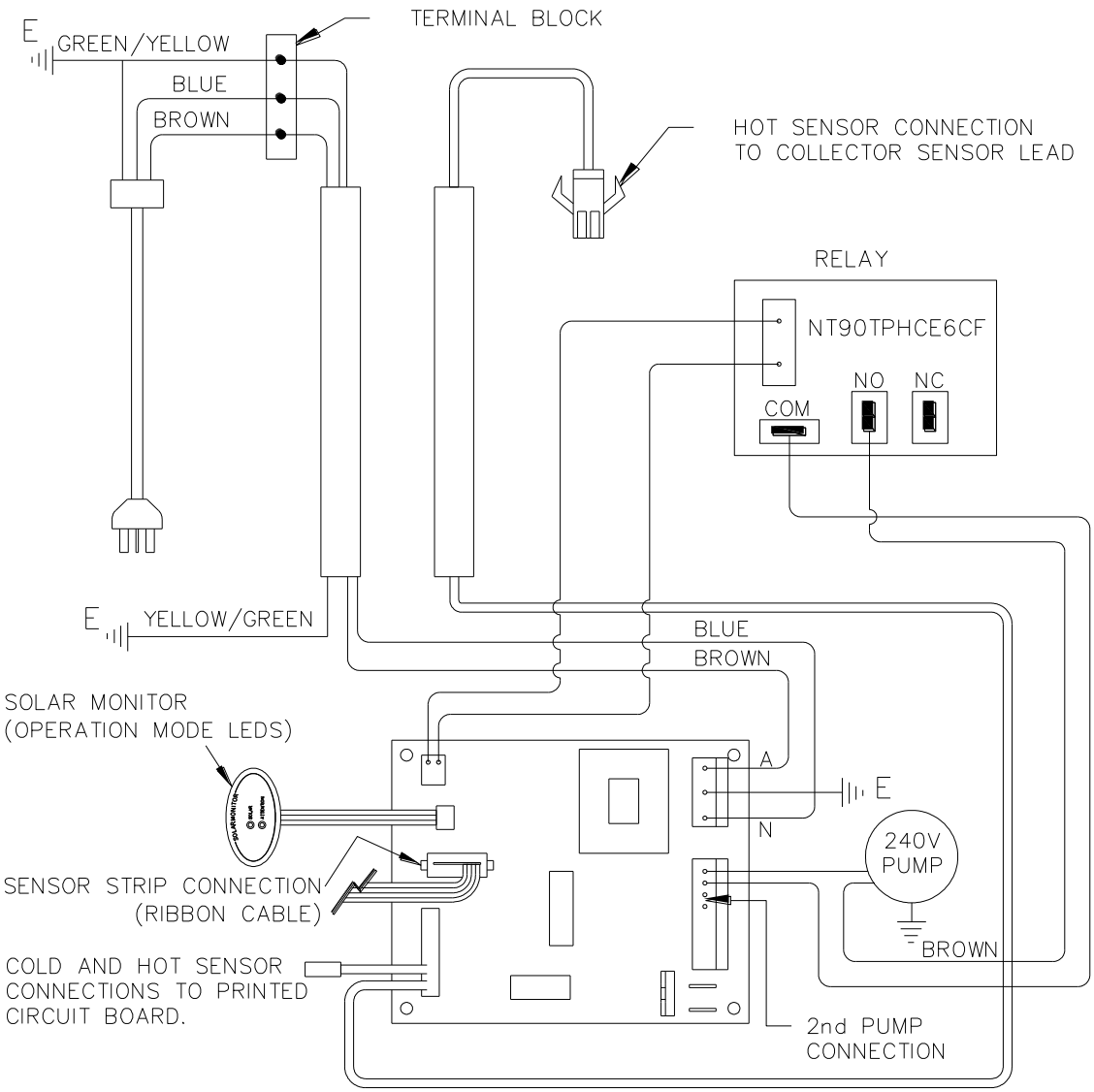

AUXILIARY PUMP

The solar collectors must be the highest point of the system. The maximum height of the solar installation from the base of the solar storage tank to the top of the solar collectors is 9 m. The pump supplied with the solar storage tank will not circulate closed circuit fluid through heights greater than 9 m and solar gain will not be achieved.

For heights greater than 9 m, an auxiliary pump (kit PN 299914) must be installed above and within 1 m of the solar storage tank. The installation of an auxiliary pump will enable a maximum height of 18 m to be achieved. The auxiliary pump is the same model pump as supplied with the solar storage tank.

Note: The installation of an auxiliary pump does not allow for an increase in total pipe length of the system. The maximum pipe lengths must be observed (refer to "Pipe Lengths" on page 30).

Part No	Kit Contents and Description Kit 2nd Pump Assembly Drain Back	299914
121994	installation instructions auxiliary pump	1
299998	pump Salmson HXL63-15P RU15/21 Union	1
108381	bracket pump wall mount	1
108380	cover pump wall mount	1
080031	screw phillips pan head no 8 x 13	4
088063	union fitting assembly ½" x ½" male (includes union ½" x ½" male, copper olive, compression nut)	2
080138	cable tie black 200 mm long	10
	cable tie mount adhesive backed 4 way	4

AUXILIARY PUMP – PLUMBING CONNECTIONS

The auxiliary pump is to be installed:

- on the solar cold pipe from the solar storage tank to the solar collectors.

  Refer to the label on top of the storage tank to identify the solar cold pipe. The solar cold pipe connection is located toward the outer edge of the top of the solar storage tank.

- within 1 m of the top of the solar storage tank.

- with the inlet and outlet in a vertical orientation.

  Note: The arrows on the rear face of the pump indicate the direction of flow and should be pointing upwards when the pump is in the installed position.

- with the mounting bracket securely fixed to a structure, such as a wall, with suitable screws or anchors.

- wired to the control board and earth connector strip (refer to "Auxiliary Pump – Electrical Connection" on page 45).

- with the speed setting set on 3.

  This speed setting must not be adjusted. The solar control unit automatically controls and adjusts the speed of the pump to maximise solar contribution. Manual adjustment of the speed dial setting may result in the system not operating correctly or efficiently.

- enclosed within the mounting cover provided in the kit to protect it from rain as the pump is not weatherproof.

  The mounting cover is to be secured to the mounting bracket with the screws provided.

- with the insulation on the solar cold pipe **fitted up to the connections of the auxiliary pump**, as very high temperature closed circuit fluid can flow from the solar collectors to the solar storage tank under certain conditions.

Refer to the installation diagram on page 44.

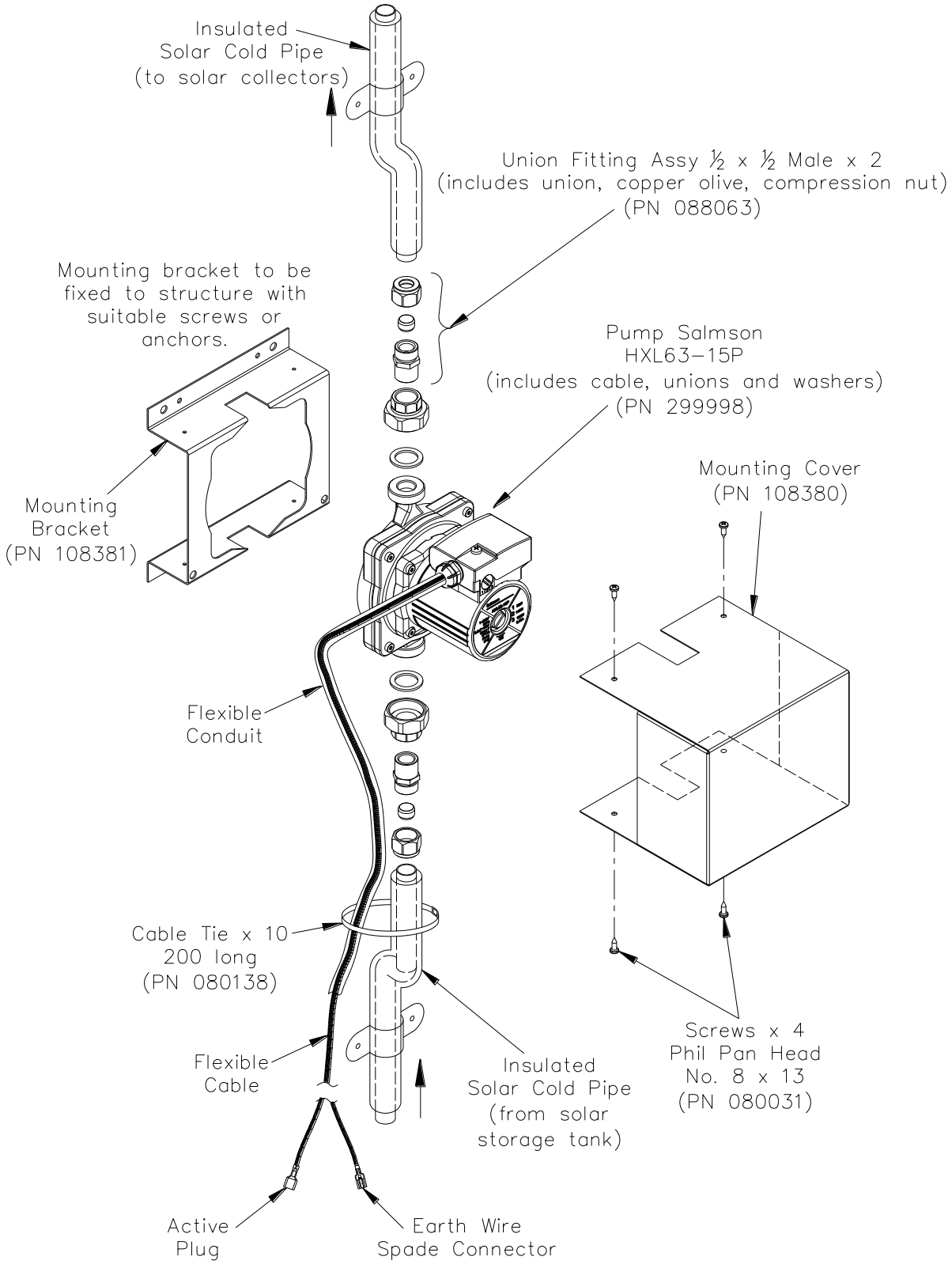

Auxiliary Pump Typical Installation

AUXILIARY PUMP – ELECTRICAL CONNECTION

The auxiliary pump, if installed, must be wired to the control board. The flexible cord supplied with the pump must be housed in a 20 mm flexible conduit. The flexible conduit should be secured to the insulated pipe work with the cable ties provided, to the side of the solar storage tank using the adhesive backed cable tie mounts and cable ties provided and to the penetration in the solar storage tank jacket using the cable gland provided.

It is necessary to make a penetration in the jacket of the solar storage tank, 30 mm to the right of and aligned with the mid height point of the lower front cover, to accommodate the flexible cable and conduit. The penetration, 20 mm in diameter, can be made using a hole saw, suitable for cutting through 0.5 mm thick Colorbond. The edge of the penetration is to be smoothed off after forming to ensure there are no sharp edges. Refer to the diagram for position.

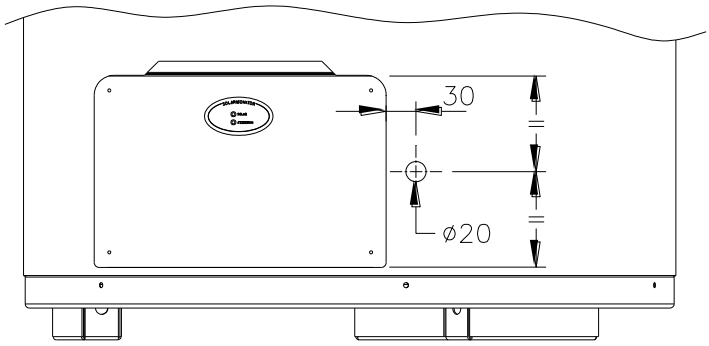

Auxiliary Pump Wiring Connection Jacket Penetration

⚠ **Warning:** The removal of the lower front cover will expose 240 V wiring. Switch off the electrical supply at the isolating switch to the water heater before removing the lower front cover and if necessary disconnecting the ribbon cable from the solar control module.

Connect the active plug from the auxiliary pump to the terminals marked “PUMP 2” on the control board (refer to “Wiring Diagram” on page 42) and the earth wire spade connector from the auxiliary pump to a terminal on the earth connector strip located on the bracket adjacent to the control board.

The solar monitor located on the lower front cover is connected to the solar control module by a ribbon cable. The ribbon cable has sufficient length to enable the removal of the lower front cover and for it to be set to one side of the opening without disconnecting the ribbon cable from the solar control module. The ribbon cable can be disconnected from the solar control module if it is necessary to remove the lower front cover completely from the work area in front of the solar storage tank.

If the ribbon cable from the solar monitor has been disconnected, reconnect it to the solar control module prior to replacing the lower front cover.

COMMISSIONING

TO FILL AND TURN ON THE WATER HEATER

The power supply to the water heater must not be switched on until the solar storage tank is filled with water.

To fill the solar storage tank with water and turn on the water heater:

- Open all of the hot water taps in the house (don't forget the shower).
- Open the cold water isolation valve fully on the cold water line to the water heater.

  Air will be forced out of the taps.
- Close each tap as water flows freely from it.
- Check the pipe work for leaks.
- Open the gas isolation valve fully.
- Check the gas pipe work for leaks.
- Open the isolation valve in the pipe work between the outlet of the heat exchanger and the solar pump, located behind the lower front cover of the solar storage tank (refer to step 4 of "Commissioning the Solar Circuit" on page 49).
- Plug in the storage tank and gas booster at the power outlets.
- Commission the solar circuit (refer to "Solar Circuit" on page 47).
- Switch on the electrical supply at the power outlets to the storage tank and gas booster.

  The power outlets must be switched on for the solar controls to operate and solar gain to be achieved and for the gas booster to operate and have its frost protection activated.
- Open a hot tap.

  The gas booster will operate automatically.
- Check to ensure the flow from each connected hot tap is sufficient to operate the gas booster.

  The minimum operating flow rate is 2.0 litres per minute.
- Check the gas inlet and burner gas pressure of the gas booster (refer to "Gas Inlet Pressure" on page 59 and "Burner Gas Pressure" on page 59).
- Check and if required adjust the preset outlet temperature or thermostat setting of the in-series booster.

  Refer to "Preset Outlet Temperature Setting" on page 59.

Explain to the householder or a responsible officer the functions and operation of the solar water heater.

⚠ **Warning:** Upon completion of the installation and commissioning of the water heater, leave this guide with the householder or a responsible officer. **DO NOT** leave this guide inside of the cover of the water heater, as it may interfere with the safe operation of the water heater or ignite when the water heater is turned on.

SOLAR CIRCUIT

It is necessary to commission and check the operation of the solar circuit as part of the installation. The water heater is supplied charged with closed circuit fluid.

The commissioning procedure includes checking the:

- circulation of closed circuit fluid through the solar circuit.
- drain back function of the solar circuit.
- solar circuit under circulation to ensure there are no leaks.
- level of the closed circuit fluid.

  The level of the closed circuit fluid should not have to be adjusted, but may need to be if:

  - there is a significant leak in the solar pipe work and closed circuit fluid has been discharged.
  - a third solar collector is installed.
  - the maximum recommended solar pipe length is exceeded.

Additional Equipment

Additional equipment will be required for the commissioning and checking of the solar circuit. This includes checking the closed circuit fluid level and conducting a drain back test. The following equipment is required:

- a 1500 mm long x 12 mm (½”) diameter clear hose (closed circuit fluid level hose).
- one (1) ½” hose clamp.
- a suitable plug for one end of the hose.
- suitable tape to affix the hose to the side of the solar storage tank.
- a torch to illuminate the working area under the heat exchanger and storage tank cylinder.
- a non-permanent marker.

Closed Circuit Fluid

The water heater is supplied charged with closed circuit fluid and it is not necessary to add further closed circuit fluid to the system. If the closed circuit fluid has been completely drained or discharged from the solar circuit and needs to be replaced, then the amount to be added is:

- 4.5 litres of concentrate, mixed with
- 11.5 litres of water.

It is necessary to undertake the solar circuit commissioning procedure if the closed circuit fluid has been replaced.

The closed circuit fluid contains food grade additives (rust inhibitor, anti-freeze agent, colour) and is harmless to the environment. However, it is good practice to recover any excess closed circuit fluid and remove from site for appropriate disposal.

⚠ **Warning:** Although non-toxic, the following first aid advice and procedures should be followed if the closed circuit fluid concentrate comes into human contact or is spilt:

- Swallowed - give milk or water and seek medical attention.
- Eyes - wash with running water.
- Skin - remove contaminated clothing and wash skin with water and soap.
- Inhaled - seek fresh air, rest and keep warm.
- Spilt - immediately remove contaminated clothing, stop leak source, absorb with a dry agent and eliminate any ignition sources nearby.

⚠ PRE-COMMISSIONING WARNINGS

- It is recommended to conduct the solar circuit commissioning procedure with the solar collectors covered with an opaque material, otherwise during the commissioning and checking procedure of the solar circuit, the closed circuit fluid may experience solar gain as it passes through the solar collectors. This will increase both the temperature and pressure of the closed circuit fluid and vapour inside of the solar circuit.
- The electrical supply must be switched off before the solar circuit is opened either at the solar circuit relief valve or at the compression nut on either of the solar hot or solar cold pipes at the top of the solar storage tank.
- If it is necessary to open the solar circuit at the solar circuit relief valve or at the compression nut on either of the solar hot or solar cold pipes at the top of the solar storage tank, then care must be taken so as not to be scalded by either the closed circuit fluid or the vapour escaping from the solar circuit.

Pre-Commissioning Notes

- Before commencing the solar circuit commissioning procedure, check the solar pipe work to ensure:
  - there is a continuous fall from the solar collectors to the solar storage tank of a minimum 5° (1 in 10 grade).
  - the maximum recommended pipe length is not exceeded.
  - the maximum height from the base of the solar storage tank to the solar collector is not exceeded.

    Rectify the solar pipe work if there is either insufficient fall or not a continuous fall of a minimum 5° from the solar collectors to the solar storage tank or if either of the maximum pipe length or maximum height of the system has been exceeded, before commencing the solar circuit commissioning procedure. Refer to “Pipe Lengths” on page 30.
- The solar collectors will gain a high level of heat during periods of solar radiation. If the solar pump is activated during a period of high solar radiation and the solar collectors have not been covered, the initial flow of closed circuit fluid will absorb this heat and a rumbling sound may be heard. This is normal and the solar circuit will achieve a stable operating condition once full flow through the solar circuit is established.
- The solar pump is set on the speed setting 3. This speed setting must not be adjusted. The solar control unit automatically controls and adjusts the speed of the pump to maximise solar contribution. Manual adjustment of the speed dial setting may result in the system not operating correctly or efficiently.

Commissioning the Solar Circuit
To commission and check the solar circuit:

1. Switch off the electrical supply at the power outlets to the solar storage tank and gas booster.

   If the pump has been operating, wait five minutes to allow the drain back of the closed circuit fluid in the solar circuit.

2. Cover the solar collectors with an opaque material to prevent solar gain during the commissioning process.

3. Remove the pipe cover from below the gas booster and the lower and upper front covers from the solar storage tank.

   The solar monitor located on the lower front cover is connected to the solar control module by a ribbon cable. The ribbon cable has sufficient length to enable the removal of the lower front cover and for it to be set to one side of the opening without disconnecting the ribbon cable from the solar control module.

   The ribbon cable can be disconnected from the solar control module if it is necessary to remove the lower front cover completely from the work area in front of the solar storage tank.

4. Ensure the isolation valve in the pipe work between the outlet of the heat exchanger and the solar pump, located behind the lower front cover of the solar storage tank, is fully open.

Attach Closed Circuit Fluid Level Hose

5. Attach the clear hose to the solar circuit.

   To attach the hose:

   - Ensure the heat exchanger drain valve is closed.

     The heat exchanger drain valve is located adjacent to the solar pump, behind the lower front cover of the solar storage tank.

   - Attach one end of the hose to the hose tail connection.

     It may be necessary to secure the hose with a hose clamp.

   - Plug the free end of the hose.

   - Affix the hose securely in a vertical orientation to the front of the solar storage tank using tape, adjacent to the text, “MINIMUM FLUID LEVEL WITH PUMP OPERATING”.

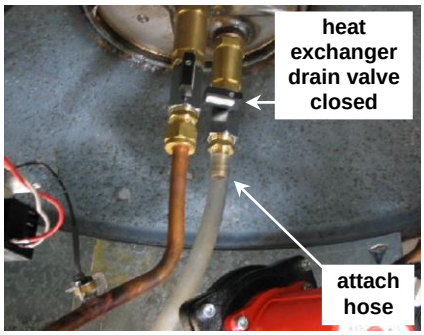

6. Disconnect the drain line from the solar circuit relief valve at the top of the solar storage tank. Remove the spring clip from the solar circuit relief valve and remove the valve.

   ⚠ **Warning:** The solar circuit may be under pressure. Take care when removing the solar circuit relief valve, as a sudden discharge of pressurised hot vapour may be experienced. This discharge will create a sharp sound of vapour being released.

7. Open the heat exchanger drain valve and remove the plug from the end of the hose.

   The closed circuit fluid will flood the hose to the static level of the closed circuit fluid inside of the heat exchanger.

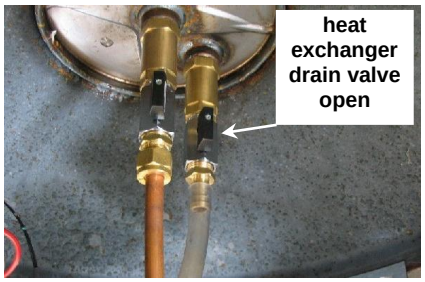

8. Mark the static level of the closed circuit fluid on the side of the solar storage tank with a non-permanent marker.

Solar Circuit Circulation

9. Disconnect the hot sensor lead from the connecting plug located on the tab in the upper front cover opening.

   It is important, at the end of this procedure when the commissioning and checking of the solar circuit is complete, **to reconnect the hot sensor lead**, otherwise when the electrical supply is switched on, the solar pump will deactivate after one hour and the solar control unit will then enter a fault mode and no solar gain will be achieved.

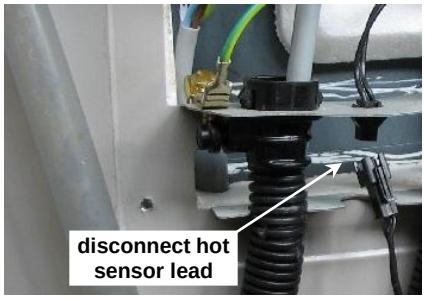

10. Switch on the electrical supply at the power outlet to the solar storage tank.

    ⚠ **Warning:** Take care not to enter the area inside the solar storage tank behind the front covers whilst the power is on as the electrical circuit will be live.

    The red LED on the solar monitor label will start flashing.

    The pump will activate and commence pumping closed circuit fluid around the solar circuit.

    The level of the closed circuit fluid in the clear hose will slowly drop to the dynamic operating level.

    Allow the pump to operate for three (3) minutes (one and two collector systems) or for five (5) minutes (3 collector system) to allow the solar circuit to fill with closed circuit fluid and stabilise.

    Note: The solar pump will operate for one hour with the hot sensor lead disconnected, before automatically turning itself off (refer to step 13).

11. Check the closed circuit fluid is circulating around the solar circuit.

    To check circulation:

    - Listen for the trickling sound of the closed circuit fluid returning into the heat exchanger by placing your ear against the side toward the top of the solar storage tank.

      If the fluid is circulating around the solar circuit, a trickling sound will be heard as the fluid returns back into the heat exchanger.

      If no trickling sound is heard, check:

      - the hot sensor lead is disconnected at the solar storage tank.

        If connected, disconnect the hot sensor lead at the solar storage tank (refer to step 9).

      - the isolation valve in the pipe work between the outlet of the heat exchanger and the solar pump, located behind the lower front cover of the solar storage tank, is fully open.

        ⚠ **Warning:** Switch off the electrical supply at the power outlet to the solar storage tank before entering the area inside the solar storage tank behind the front cover.

        If closed, open the isolation valve on the outlet of the heat exchanger (refer to step 4).

      - there is no leakage from the solar circuit. It is important to check all of the solar pipe work, including in the roof space and on the roof.

        If leaking, rectify any leaks in the solar circuit.

      - the height from the base of the storage tank to the top of the collectors has not exceeded the maximum allowable height.

      - the length of solar hot and solar cold pipes has not exceeded the maximum recommended pipe length.

        If the maximum allowable height or the maximum recommended pipe length has been exceeded, it may be necessary to relocate the solar collectors to either a lower level or closer to the solar storage tank, or install a second solar pump, or relocate the solar storage tank closer to the solar collectors. Refer to "Pipe Lengths" on page 30.

12. Mark the dynamic level of the closed circuit fluid in the hose on the side of the solar storage tank with a non-permanent marker when satisfied the solar circuit circulation is operating satisfactorily.

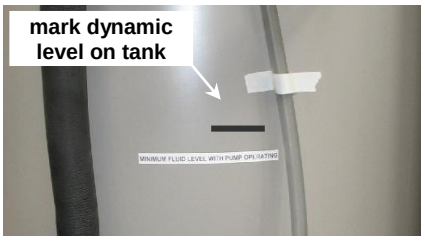

13. If the procedure to check the solar circuit circulation is not complete before the pump has automatically turned off, then:

    - switch off the electrical supply at the power outlet to the solar storage tank.
    - recommence this procedure from step 10.

Drain Back Function

14. Switch off the electrical supply at the power outlet to the solar storage tank.

    The red LED on the solar monitor label will stop flashing.

    The pump will deactivate.

    The closed circuit fluid will drain back down to the heat exchanger and the level of the closed circuit fluid in the clear hose will rise.

    Wait five (5) minutes to allow the drain back of the closed circuit fluid in the solar circuit.

15. Note the level of the closed circuit fluid in the fluid level hose.

    The closed circuit fluid should drain back to the original static level.

    If the closed circuit fluid does not drain back completely to this level, then check:

    - there is a continuous fall of a minimum 5° (1 in 10 grade) in the solar pipe work from the solar collectors to the solar storage tank.
    - the solar collectors have an inclination of not less than 10°.

      (refer to "Solar Collector Location" on page 28)
    - the connectors on the inlet and outlet of the collectors are orientated downwards to ensure complete drain back of the closed circuit fluid from the solar collectors.

    If necessary, rectify the:

    - solar pipe work if there is either insufficient fall or not a continuous fall in the pipe work.
    - solar collector inclination if it is less than 10°.
    - orientation of the connectors downwards if they are not orientated correctly.

    Recheck the drain back function of the solar circuit by repeating step 6 and recommencing this procedure from step 10.

Closed Circuit Fluid Level

16. Measure the distance from the text marking “MINIMUM FLUID LEVEL WITH PUMP OPERATING” to the closed circuit fluid dynamic level marked on the side of the solar storage tank during step 12.

    The correct closed circuit fluid dynamic level for efficient operation of the system when the pump is operating is between the “MINIMUM FLUID LEVEL WITH PUMP OPERATING” text marking on the side of the solar storage tank and 150 mm above this mark.

    - If the closed circuit fluid dynamic level marked on the side of the solar storage tank during step 12 is greater than 150 mm above the text marking, it will be necessary to drain closed circuit fluid from the heat exchanger.
    - If the closed circuit fluid dynamic level is below the text marking, it will be necessary to add water to the heat exchanger to top up the level of closed circuit fluid.

      There is sufficient closed circuit fluid concentrate in the solar circuit heat exchanger such that only water needs to be added to the system if it is required to top up the level of closed circuit fluid.

    Note: The dynamic level of the closed circuit fluid, upon the completion of commissioning, must not be less than the “MINIMUM FLUID LEVEL WITH PUMP OPERATING” text marking on the side of the solar storage tank or greater than 150 mm above this mark.

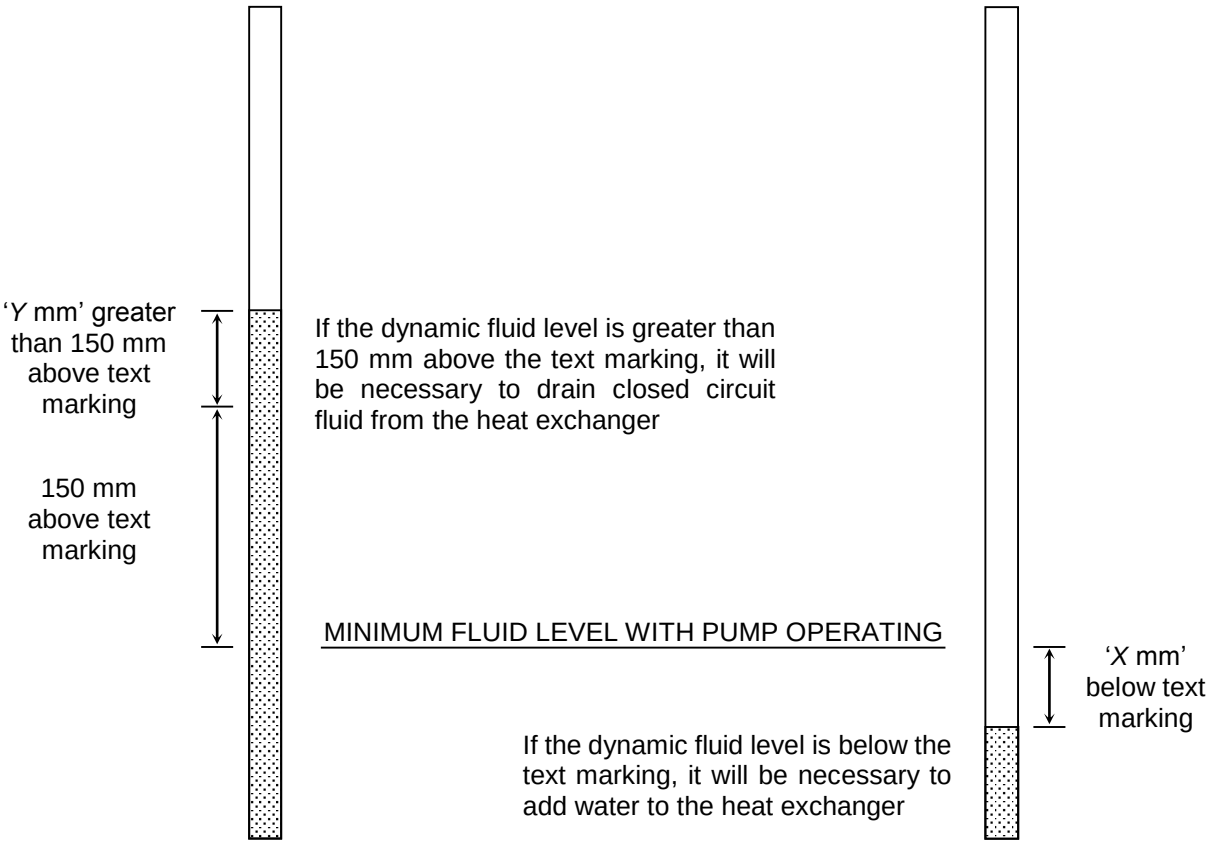

17. Determine the correct amount of water to be added to or closed circuit fluid to be drained from the heat exchanger if the dynamic level is either below the text marking “MINIMUM FLUID LEVEL WITH PUMP OPERATING” or more than 150 mm above this mark.

    Each 100 mm of fluid level height is equivalent to three (3) litres of closed circuit fluid.

20 mm	0.6 litres	80 mm	2.4 litres	140 mm	4.2 litres
40 mm	1.2 litres	100 mm	3.0 litres	160 mm	4.8 litres
60 mm	1.8 litres	120 mm	3.6 litres	180 mm	5.4 litres

- Mark the required closed circuit fluid level to be obtained on the side of the solar storage tank with a non-permanent marker beside the clear hose, in relation to the static level marked on the side of the solar storage tank during step 8.

  E.g.: If the dynamic level is 30 mm below the text marking, then place a mark 30 mm above the static level marked on the side of the solar storage tank in step 8. It would be necessary to add one litre of water to the heat exchanger.

  E.g.: If the dynamic level is 180 mm above the text marking, then place a mark at least 30 mm, but no more than 180 mm, below the static level marked on the side of the solar storage tank. It would be necessary to drain between one litre and five litres of closed circuit fluid from the heat exchanger.

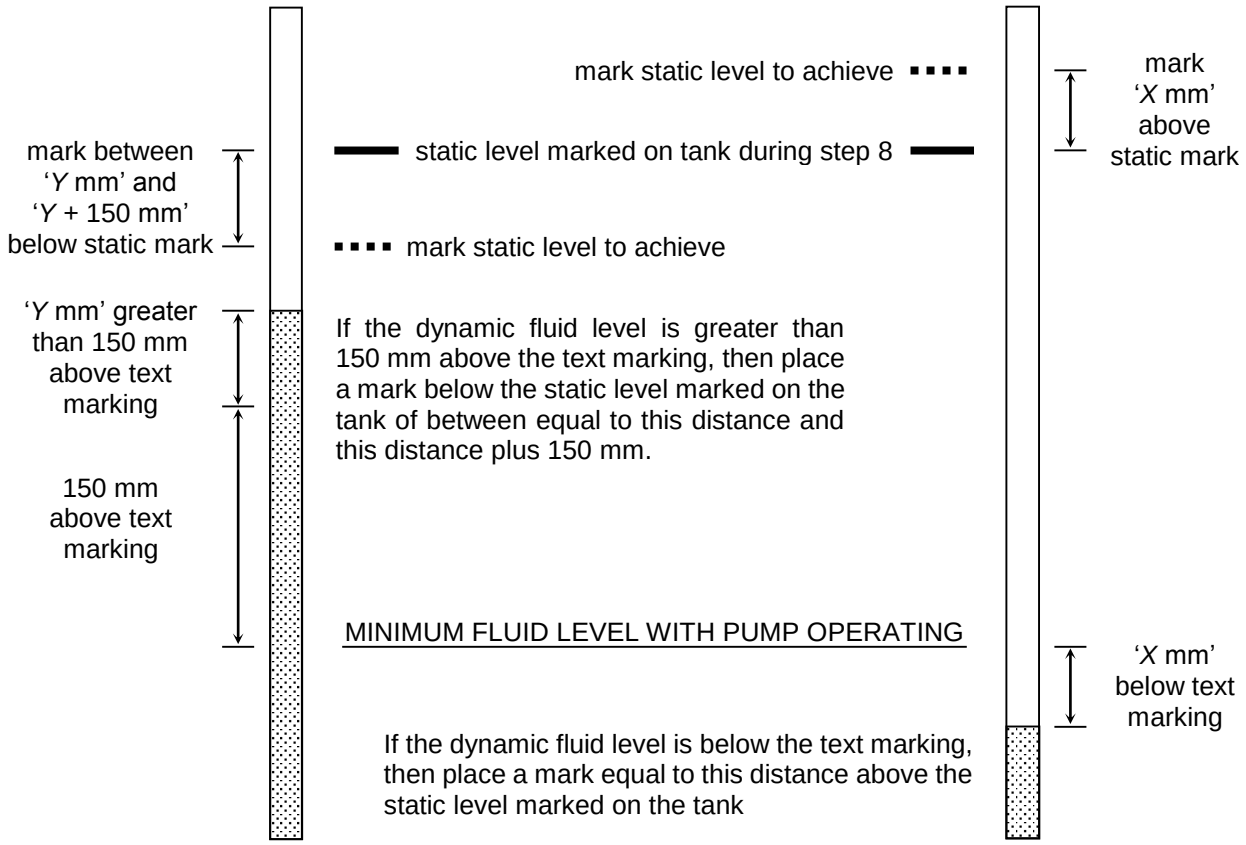

18. Add water to top up the level of the closed circuit fluid in the heat exchanger if required.

    To add water to the closed circuit fluid:

    - If not already removed, disconnect the drain line and remove the spring clip from the solar circuit relief valve at the top of the solar storage tank and remove the valve (refer to step 6).

      ⚠ **Warning:** The solar circuit may be under pressure. Take care when removing the solar circuit relief valve, as a sudden discharge of pressurised hot vapour may be experienced. This discharge will create a sharp sound of vapour being released.

    - Undo the compression nut on the solar cold pipe at the top of the solar storage tank and remove the pipe work from the fitting.

    - Place a funnel in the solar cold connection fitting at the top of the solar storage tank.

    - Add water slowly through the funnel until the level of fluid in the hose is at the desired level as marked on the solar storage tank.

      Note: It may be necessary to either lift the funnel slightly to allow air to escape around the funnel whilst filling.

    - Remove the funnel from the solar cold connection fitting.

    - Position the solar cold pipe correctly in its fitting and tighten the compression nut.

19. Drain closed circuit fluid from the heat exchanger if required.

    To drain closed circuit fluid:

    - If not already removed, disconnect the drain line and remove the spring clip from the solar circuit relief valve at the top of the solar storage tank and remove the valve (refer to step 6).

      ⚠ **Warning:** The solar circuit may be under pressure. Take care when removing the solar circuit relief valve, as a sudden discharge of pressurised hot vapour may be experienced. This discharge will create a sharp sound of vapour being released.

    - Place the end of the solar fluid hose into a graduated volumetric container and drain closed circuit fluid until the level of fluid in the hose is at the desired level as marked on the solar storage tank.

      It may be necessary to drain off the closed circuit fluid in small amounts, raising the hose back to the top of the solar storage tank and noting the level of the closed circuit fluid in the clear hose each time, so as not to drain below the desired level.

      Note: The closed circuit fluid contains food grade additives (rust inhibitor, anti-freeze agent, colour) and is harmless to the environment. However, it is good practice to recover any excess fluid and remove from site for appropriate disposal.

    - Re-affix the hose to the same location on the side of the solar storage tank.

20. If water has been added to or closed circuit fluid has been drained from the heat exchanger, recommence this procedure from step 10.

Pressure Testing the Solar Circuit

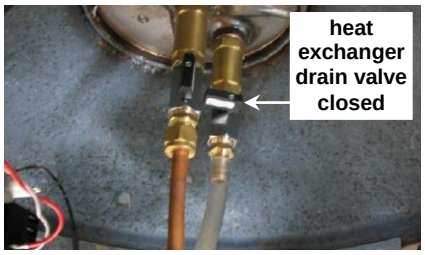

21. Close the heat exchanger drain valve.

22. Refit the solar circuit relief valve, orientating the valve outlet to the rear of the solar storage tank. Secure with the spring clip. Reconnect the drain pipe to the valve.

23. Switch on the electrical supply at the power outlet to the solar storage tank.

    ⚠ **Warning:** Take care not to enter the area inside the solar storage tank behind the front covers whilst the power is on as the electrical circuit will be live.

    The red LED on the solar monitor label will start flashing and the pump will activate and commence pumping fluid around the solar circuit.

    Note: The level of the closed circuit fluid in the clear hose will not change, as the heat exchanger drain valve has been closed.

    Allow the pump to operate for three (3) minutes (one and two collector systems) or for five (5) minutes (3 collector system) to allow the solar circuit to stabilise and fill with closed circuit fluid.

    Note: The solar pump will operate for one hour with the hot sensor lead disconnected, before automatically turning itself off. Refer to step 25.

24. Check the solar pipe work and collector unions for leaks whilst the pump is operating and the solar circuit is at its working pressure. It is important to check all of the solar pipe work, including in the roof space and on the roof.

25. If the procedure to check the solar pipe work for leaks is not complete before the pump has automatically turned off, then:

    - switch off the electrical supply at the power outlet to the solar storage tank.
    - recommence this procedure from step 23.

26. Switch off the electrical supply at the power outlet to the solar storage tank.

    The red LED on the solar monitor label will stop flashing and the pump will deactivate.

    The closed circuit fluid will drain back down to the heat exchanger.

27. Rectify any leaks in the solar pipe work and collector unions.

    If brazing is required to fix any leaks, then it is necessary to remove the solar circuit relief valve (refer to step 6).

    ⚠ **Warning:** The solar circuit may be under pressure. Take care when removing the solar circuit relief valve, as a sudden discharge of pressurised hot vapour may be experienced. This discharge will create a sharp sound of vapour being released.

28. If minor leaks have been rectified, recommence this procedure from step 23. If a major leak has been rectified, recommence this procedure from step 6.

Remove Closed Circuit Fluid Level Hose

29. Remove the clear hose from the solar storage tank when satisfied the commissioning procedure is complete. To remove the hose:

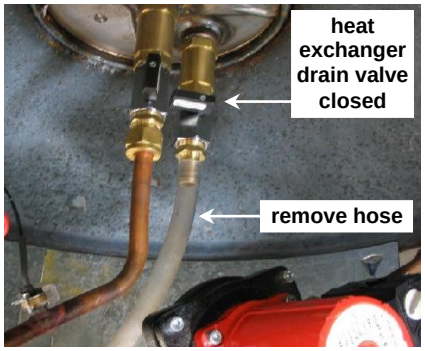

- Ensure the heat exchanger drain valve is closed.
- Remove the hose from the side of the storage tank and place the end into a container to collect the closed circuit fluid remaining in the hose.
- Replace the plug into the free end of the hose and lay the hose flat on the ground.
- Loosen the hose clamp, if fitted, and carefully remove the hose and hose clamp from the heat exchanger drain valve fitting, ensuring there is no spillage of the closed circuit fluid.

  Clean up any spillage of closed circuit fluid.
- Place the open end of the hose into the container and recover the remainder of the closed circuit fluid from the hose.

  Note: The closed circuit fluid contains food grade additives (rust inhibitor, anti-freeze agent, colour) and is harmless to the environment. However, it is good practice to recover any excess closed circuit fluid and remove from site for appropriate disposal.

Completing the Commissioning of the Solar Circuit

30. Reconnect the hot sensor lead to the connecting plug located on the tab in the upper front cover opening.

    It is important to reconnect the hot sensor lead, otherwise when the electrical supply is switched on, the solar pump will deactivate after one hour and the solar control unit will then enter a fault mode, will not operate and no solar gain will be achieved.

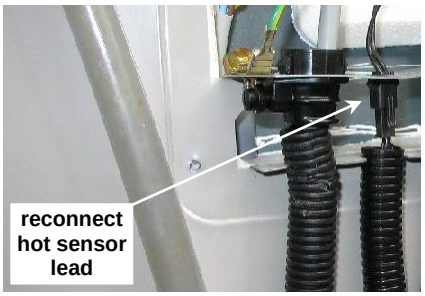

31. Replace the lower and upper front covers of the solar storage tank and the pipe cover to the underneath of the gas booster.
    - If the ribbon cable from the solar monitor has been disconnected, reconnect it to the solar control module prior to replacing the lower front cover.
32. Clean off the marks made on the side of the solar storage tank.
33. Remove the covers from the solar collectors.
34. Switch on the electrical supply at the power outlets to the solar storage tank and gas booster.

DIAGNOSTIC FEATURES OF THE SOLAR CONTROLLER

The solar storage tank incorporates a solar monitor which is connected to the solar control module by a ribbon cable. The solar monitor is located on the lower front cover and houses both a green and a red LED.

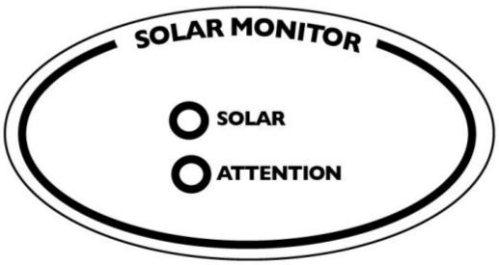

The green LED, marked “Solar”, indicates the current operational mode of the solar water heater and the red LED, marked “Attention”, indicates a fault mode.

The green LED will emit either a constant glow or a series of flashes, with a 2 second interval between each series.

The red LED will emit a series of flashes, with a 2 second interval between each series, only if there is a particular fault condition with the system.

The modes are:

Flashes	Operational Modes	Flashes	Fault Modes
solid green (remains on)	Standby mode		
		1 x red	Hot sensor in collector – open circuit
2 x green	Flooding solar circuit	2 x red	Hot sensor in collector – short circuit
3 x green	Pump flow control	3 x red	Cold sensor – open or short circuit
4 x green	Pump flow established	4 x red	Top three tank thermistors – open or short circuit
5 x green	Tank at maximum temperature	5 x red	Sensor strip plugged into incorrect port on printed circuit board (PCB)
no green (remains off)	Call for service	6 x red	No heating fluid flow through collectors

Notes:

- ⚠ **Warning:** The removal of the lower front cover will expose 240 V wiring. Switch off the electrical supply at the power outlet to the solar storage tank before removing the lower front cover and if necessary disconnecting the ribbon cable from the solar control module. The lower front cover and the ribbon cable must only be removed by a qualified person.
- The ribbon cable connecting the solar monitor to the solar control module has sufficient length to enable the removal of the lower front cover and for it to be set to one side of the opening, without disconnecting the ribbon cable from the solar control module.
- The ribbon cable can be disconnected from the solar control module if it is necessary to remove the lower front cover completely from the work area in front of the solar storage tank.
- If the ribbon cable from the solar monitor has been disconnected, reconnect it to the solar control module prior to replacing the lower front cover.

PRESET OUTLET TEMPERATURE SETTING

Note: AS 3498 requires that a water heater provides the means to inhibit the growth of Legionella bacteria in potable water. This water heater has an in-series gas booster which can satisfy this AS 3498 requirement provided the gas booster is energised, the booster preset outlet temperature setting is 70°C or higher and a remote temperature controller is not used.

It will be necessary to check and if required to adjust the preset outlet temperature setting of the in-series gas booster. Refer to the "Preset Outlet Temperature Setting" section of the Installation Instructions and Owner's Guide supplied with the in-series gas booster.

GAS INLET PRESSURE

IMPORTANT - CHECK the gas supply pressure at the inlet to the water heater with the water heater and all other gas burning appliances in the premises operating (burners alight). The minimum gas supply pressure is:

Natural Gas	1.13 kPa	Propane	2.75 kPa

If this minimum cannot be achieved, it may indicate the meter or the gas line to the water heater is undersized. It is important to ensure that an adequate gas supply pressure is available to the water heater when other gas burning appliances, on the same gas supply, are operating.

It is necessary to remove the pipe cover from underneath the gas booster, by undoing the retaining screws, in order to test the gas pressure at the inlet of the gas booster. Refit the pipe cover at the completion of the installation.

Refer to the "Gas Inlet Test Point Pressure" section of the Installation Instructions and Owner's Guide supplied with the gas booster.

BURNER GAS PRESSURE

It is necessary to check the burner gas pressure at both the minimum and maximum operational settings. It is necessary to have the electrical supply to the water heater switched on, the hot water must be flowing and the burners on to check and if necessary adjust the operational gas pressures.

⚠ **Warning:** The removal of the front cover will expose 240 volt wiring. Take care not to touch wiring terminals.

Refer to the "Minimum Test Point Gas Pressure" and "Maximum Test Point Gas Pressure" sections of the Installation Instructions and Owner's Guide supplied with the gas booster.

TO TURN OFF THE WATER HEATER

If it is necessary to turn off the water heater on completion of the installation, such as on a building site or where the premises is vacant, then:

- Switch off the electrical supply at the power outlets to the solar storage tank and gas booster (refer to note below).
- Close the gas isolation valve at the inlet to the water heater.
- Close the cold water isolation valve at the inlet to the water heater.
- Drain the gas booster if there is a risk of freezing conditions occurring (refer to "Draining The Water Heater" on page 60).

Notes:

- The frost protection system of the gas booster will be rendered inoperable if electrical power is not available at the gas booster.
- Damage caused by freezing due to the unavailability of power at the gas booster is not covered by the Rheem warranty (refer to "Terms of the Rheem Warranty" on page 63).
- If the power has been switched off to the gas booster and there is a risk of freezing, then it is necessary to drain the gas booster (refer to "Draining the Water Heater" on page 60).

DRAINING THE WATER HEATER

GAS BOOSTER WATER HEATER

To drain the gas booster water heater:

- Turn off the water heater (refer to "To Turn Off The Water Heater" on page 59).
- Open a hot tap (preferably the shower outlet).
- Unscrew the two drain plugs, one each at the cold water inlet and hot water outlet, on the underside of the gas booster.

  Water will drain from the gas booster.
- When water stops flowing from the gas booster, close the hot tap.

Note: It is recommended not to screw the drain plugs back in, until the water heater is to be turned on again.

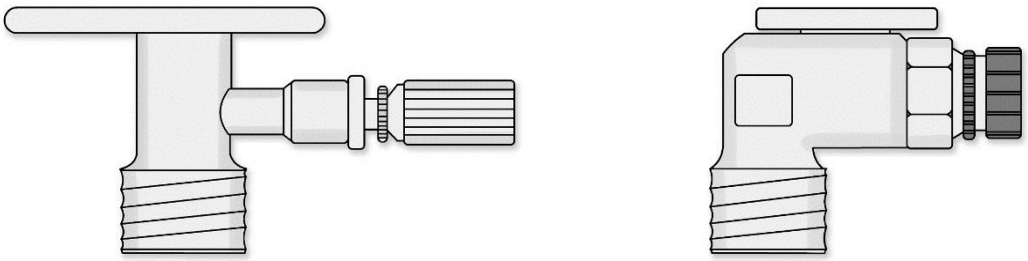

SOLAR STORAGE TANK

⚠ **Warning:** Exercise care, as water discharged from the solar storage tank may be of a very high temperature.

To drain the storage tank:

- Turn off the water heater (refer to "To Turn Off The Water Heater" on page 59).
- Close all hot water taps.
- Operate the relief valve release lever - do not let the lever snap back or you will damage the valve seat.

  Operating the lever will release the pressure in the water heater.
- Undo the union at the cold water inlet to the solar storage tank and attach a hose to the water heater side of the union.

  Let the other end of the hose go to a drain.
- Operate the relief valve again.

  This will let air into the water heater and allow the water to drain through the hose.

HEAT EXCHANGER

⚠ **Warning:** Exercise care, as fluid discharged from the heat exchanger may be of a very high temperature.

To drain the heat exchanger:

- Switch off the electrical supply at the power outlet to the solar storage tank.
- Remove the lower front cover from the solar storage tank.

  The solar monitor located on the lower front cover is connected to the solar control module by a ribbon cable. The ribbon cable has sufficient length to enable the removal of the lower front cover and for it to be set to one side of the opening without disconnecting the ribbon cable from the solar control module.

  The ribbon cable can be disconnected from the solar control module if it is necessary to remove the lower front cover completely from the work area in front of the solar storage tank.

  At the completion of this procedure, if the ribbon cable from the solar monitor has been disconnected, reconnect it to the solar control module prior to replacing the lower front cover.
- Attach a 12 mm (½") diameter clear hose to the heat exchanger drain valve hose tail connection (refer to step 5 of "Attach Closed Circuit Fluid Level Hose" on page 49).
- Disconnect the drain line from the solar circuit relief valve at the top of the solar storage tank. Remove the spring clip from the solar circuit relief valve and remove the valve.

  ⚠ **Warning:** The solar circuit may be under pressure. Take care when removing the solar circuit relief valve, as a sudden discharge of pressurised hot vapour may be experienced. This discharge will create a sharp sound of vapour being released.
- Open the heat exchanger drain valve and remove the plug from the end of the hose.
- The closed circuit fluid will flood the hose.
- Place the end of the hose into a container and drain the closed circuit fluid from the heat exchanger.

  Note: The heat exchanger can contain up to 16 litres of closed circuit fluid. A suitably sized container should be used to accommodate this amount of fluid.

  The closed circuit fluid contains food grade additives (rust inhibitor, anti-freeze agent, colour) and is harmless to the environment. However, it is good practice to recover any excess closed circuit fluid and remove from site for appropriate disposal.

This page is intentionally blank.

RHEEM SOLAR PREMIER LOLINE
WATER HEATER WARRANTY - AUSTRALIA ONLY

SOLAR PREMIER LOLINE WATER HEATER MODEL 596270

1. THE RHEEM WARRANTY – GENERAL

1.1 This warranty is given by Rheem Australia Pty Limited ABN 21 098 823 511 of 1 Alan Street, Rydalmere New South Wales.

1.2 Rheem offer a trained and qualified national service network who will repair or replace components at the address of the water heater subject to the terms of the Rheem warranty. Rheem Service, in addition can provide preventative maintenance and advice on the operation of your water heater. The Rheem Service contact number is available 7 days a week on 131031 with Service personnel available to take your call from 8am to 8pm daily (hours subject to change).

1.3 For details about this warranty, you can contact us on 131031 or by email at warrantyenquiry@rheem.com.au (not for service bookings).

1.4 The terms of this warranty and what is covered by it are set out in sections 2 and 3 and apply to water heaters manufactured after 1st August 2013.

1.5 If a subsequent version of this warranty is published, the terms of that warranty and what is covered by it will apply to water heaters manufactured after the date specified in the subsequent version.

2. TERMS OF THE RHEEM WARRANTY AND EXCLUSIONS TO IT

2.1 The decision of whether to repair or replace a faulty component is at Rheem's sole discretion.

2.2 If you require a call out and we find that the fault is not covered by the Rheem warranty, you are responsible for our standard call out charge. If you wish to have the relevant component repaired or replaced by Rheem, that service will be at your cost.

2.3 Where a failed component or cylinder is replaced under this warranty, the balance of the original warranty period will remain effective. The replacement does not carry a new Rheem warranty.

2.4 Where the water heater is installed outside the boundaries of a metropolitan area as defined by Rheem or further than 25 km from either a regional Rheem branch office or an Accredited Rheem Service Agent's office, the cost of transport, insurance and travelling between the nearest branch office or Rheem Accredited Service Agent's office and the installed site shall be the owner's responsibility.

2.5 Where the water heater is installed in a position that does not allow safe or ready access, the cost of that access, including the cost of additional materials handling and/or safety equipment, shall be the owner's responsibility. In other words, the cost of dismantling or removing cupboards, doors or walls and the cost of any special equipment to bring the water heater to floor or ground level or to a serviceable position is not covered by this warranty.

2.6 This warranty only applies to the original and genuine Rheem water heater in its original installed location and any genuine Rheem replacement parts.

2.7 The Rheem warranty does not cover faults that are a result of:

a) Accidental damage to the water heater or any component (for example: (i) Acts of God such as floods, storms, fires, lightning strikes and the like; and (ii) third party acts or omissions).

b) Misuse or abnormal use of the water heater.

c) Installation not in accordance with the Owner's Guide and Installation Instructions or with relevant statutory and local requirements in the State or Territory in which the water heater is installed.

d) Connection at any time to a water supply that does not comply with the water supply guidelines as outlined in the Owner's Guide and Installation Instructions.

e) Repairs, attempts to repair or modifications to the water heater by a person other than Rheem Service or a Rheem Accredited Service Agent.

f) Faulty plumbing or faulty gas or power supply.

g) Failure to maintain the water heater in accordance with the Owner's Guide and Installation Instructions.

h) Transport damage.

i) Fair wear and tear from adverse conditions (for example, corrosion).

j) Cosmetic defects.

k) Breakage of collector glass for any reason including hail damage (we suggest that the collector glass be covered by your home insurance policy).

l) Ice formation in the closed circuit system due to non Rheem approved or incorrectly mixed closed circuit fluid being used.

m) Non Rheem approved or incorrectly mixed closed circuit fluid being used or incorrect or insufficient filling of the closed circuit system with the closed circuit fluid.

2.8 Subject to any statutory provisions to the contrary, this warranty excludes any and all claims for damage to furniture, carpet, walls, foundations or any other consequential loss either directly or indirectly due to leakage from the water heater, or due to leakage from fittings and/ or pipe work of metal, plastic or other materials caused by water temperature, workmanship or other modes of failure.

2.9 If the water heater is not sized to supply the hot water demand in accordance with the guidelines in the Rheem water heater literature, any resultant fault will not be covered by the Rheem warranty.

RHEEM SOLAR PREMIER LOLINE
WATER HEATER WARRANTY - AUSTRALIA ONLY

SOLAR PREMIER LOLINE WATER HEATER MODEL 596270

3. WHAT IS COVERED BY THE RHEEM WARRANTY FOR THE WATER HEATERS DETAILED IN THIS DOCUMENT

3.1 Rheem will repair or replace a faulty component of your water heater if it fails to operate in accordance with its specifications as follows:

What components are covered	The period from the date of installation in which the fault must appear in order to be covered	What coverage you receive
All components	Year 1	Repair and/or replacement of the faulty component, free of charge, including labour.
The cylinder (if the water heater is installed in a single-family domestic dwelling)	Years 2 & 3	Repair and / or replacement of the cylinder, free of charge, including labour.
	Years 4 & 5	Replacement cylinder, free of charge. Installation and repair labour costs are the responsibility of the owner.
The cylinder (if the water heater is not installed in a single-family domestic dwelling)	Years 2 & 3	Replacement cylinder, free of charge. Installation and repair labour costs are the responsibility of the owner.
The solar collector (all installations)	Years 2 to 5	Replacement solar collector, free of charge. Installation and repair labour costs are the responsibility of the owner.

4. ENTITLEMENT TO MAKE A CLAIM UNDER THIS WARRANTY

4.1 To be entitled to make a claim under this warranty you need to:

a) Be the owner of the water heater or have consent of the owner to act on their behalf.

b) Contact Rheem Service without undue delay after detection of the defect and, in any event, within the applicable warranty period.

4.2 You are not entitled to make a claim under this warranty if your water heater:

a) Does not have its original serial numbers or rating labels.

b) Is not installed in Australia.

5. HOW TO MAKE A CLAIM UNDER THIS WARRANTY

5.1 If you wish to make a claim under this warranty, you need to:

a) Contact Rheem on 131031 and provide owner's details, address of the water heater, a contact number and date of installation of the water heater or if that's unavailable, the date of manufacture and serial number (from the rating label on the water heater).

b) Rheem will arrange for the water heater to be tested and assessed on-site.

c) If Rheem determines that you have a valid warranty claim, Rheem will repair or replace the water heater in accordance with this warranty.

5.2 Any expenses incurred in the making of a claim under this warranty will be borne by you.

6. THE AUSTRALIAN CONSUMER LAW

6.1 Our goods come with guarantees that cannot be excluded under the Australian Consumer Law. You are entitled to a replacement or refund for a major failure and for compensation for any other reasonably foreseeable loss or damage. You are also entitled to have the goods repaired or replaced if the goods fail to be of acceptable quality and the failure does not amount to a major failure.

6.2 The Rheem warranty (set out above) is in addition to any rights and remedies that you may have under the Australian Consumer Law.

For warranty information on the gas booster, refer to the Owner's Guide and Installation Instructions supplied with the gas booster.

RHEEM AUSTRALIA PTY LTD, A.B.N. 21 098 823 511, www.rheem.com.au
For Service Telephone 131 031 AUSTRALIA or 0800 657 335 NEW ZEALAND

Revision Date: 2015 February 126577H